CMH Multi-Hopper Repackaging for Shipment

Use the following procedures to prepare the multi-hopper for shipment.

1. Press the power button to power off the printer.

   Caution: Wait until all the lights on the front panel are off to make sure that the printer power is off.

2. Unplug the power cord from the printer (the cord is not required for shipment).
3. Remove the multi-hopper supplies.
   a. Unlock the multi-hopper.
   b. Push the hopper lock slider to the unlocked position.
   c. Move the three lock rods over to the unlocked position.

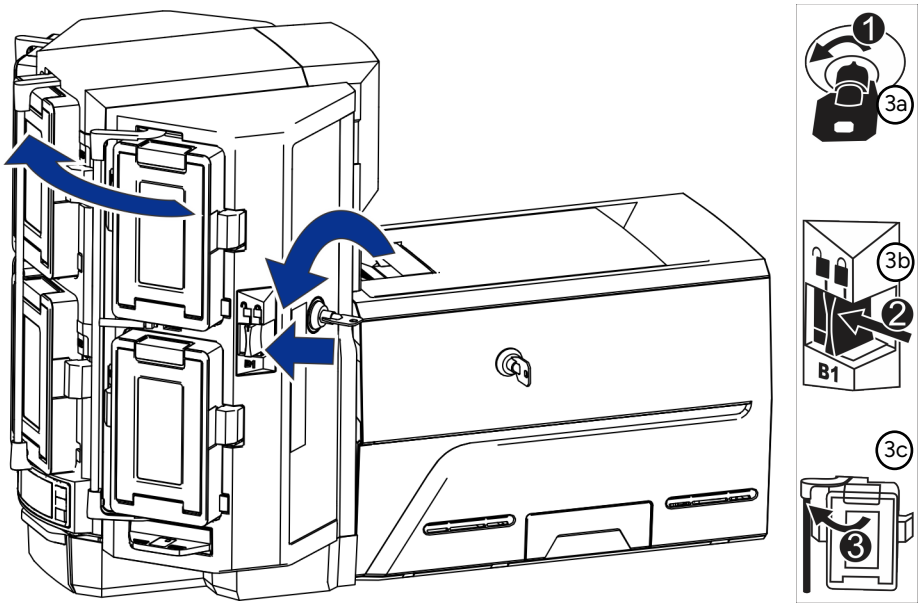

©2026 Entrust Corporation. All rights reserved.

d. Remove all cards from the six hoppers.

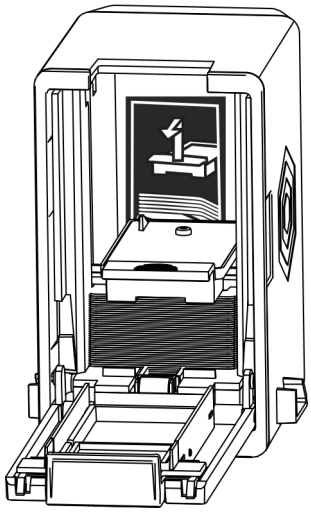

e. Move the three lock rods over to the locked position.

f. Pull the hopper lock slider to the locked position.

g. Lock the multi-hopper.

4. Remove the multi-hopper from the printer.

   a. Unlock and open the printer.

   b. Remove the print ribbon cartridge.

   c. Push in on the multi-hopper retaining tab located at the inside front of the printer frame.

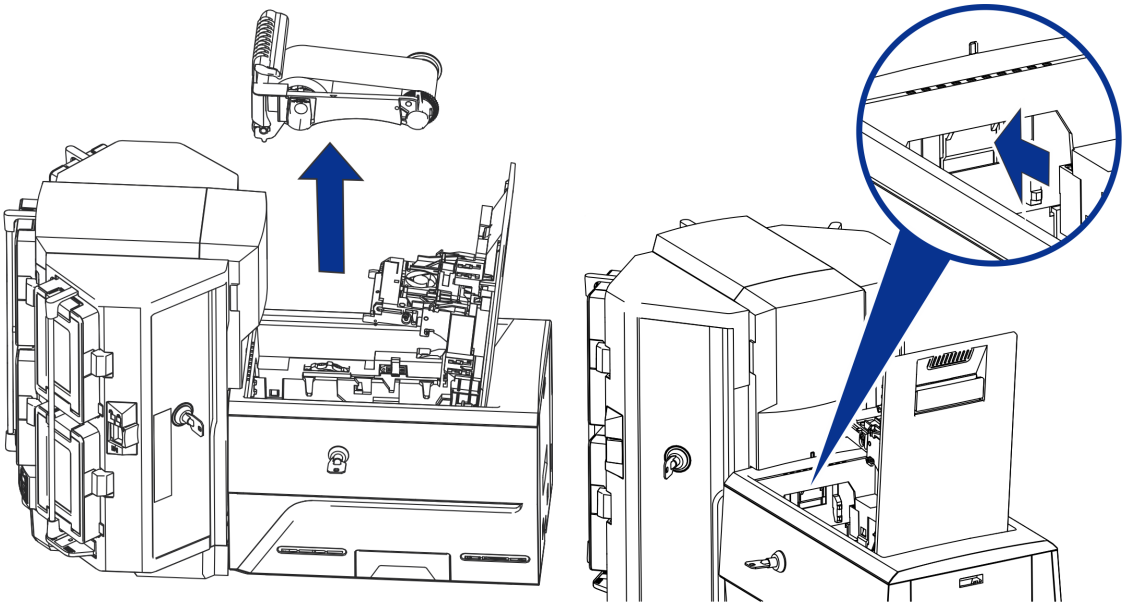

©2026 Entrust Corporation. All rights reserved.

d. Lift up slightly on the multi-hopper component to release the mounting hooks from the printer frame.

e. Pull out to remove the multi-hopper.

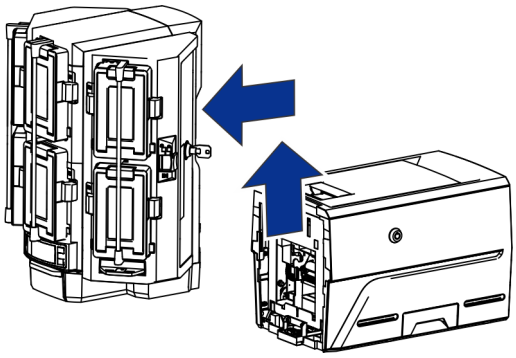

5. Remove the transition enclosure and secure the elevator.

   a. Use the removal tool to remove the transition enclosure from the multi-hopper by inserting the folded edge of the tool behind the enclosure and lifting up until the snap comes out and the enclosure can move up.

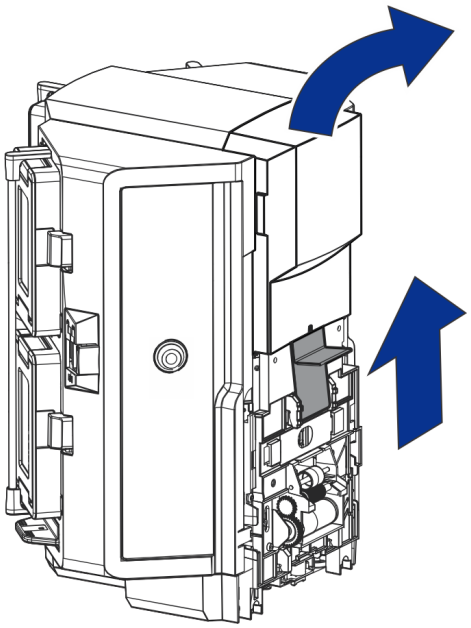

©2026 Entrust Corporation. All rights reserved.

b. Insert the restraining pins at the top and bottom of the multi-hopper to secure the elevator inside the multi-hopper for shipping.

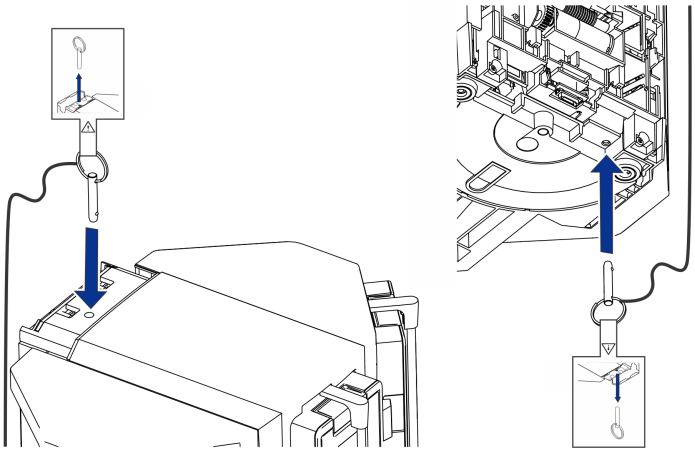

6. Pack and secure the multi-hopper.

   a. Place the multi-hopper and the transition enclosure into the bottom foam cap.

The lock keys and removal tool do not need to be returned.
Place the multi-hopper into a plastic bag, if available.

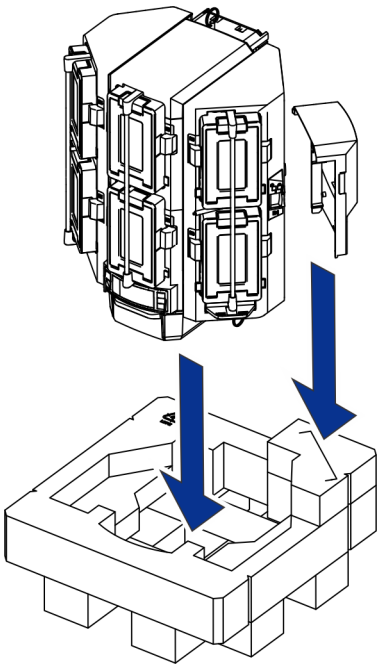

©2026 Entrust Corporation. All rights reserved.

b. Lift the multi-hopper with the bottom foam cap into the shipping carton.

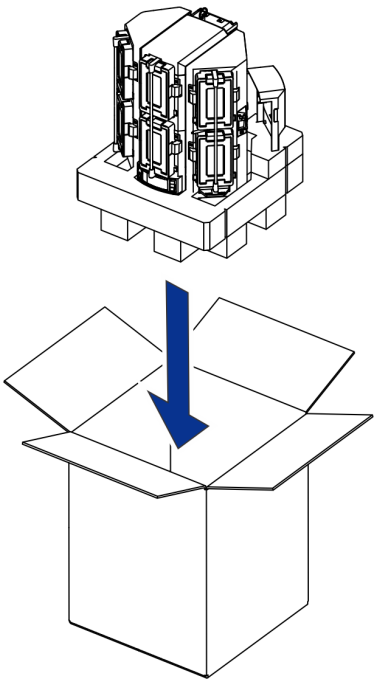

c. Place the top foam cap in the shipping carton on top of the multi-hopper.

Make sure the transition enclosure goes into the foam cap or the foam will catch on it.

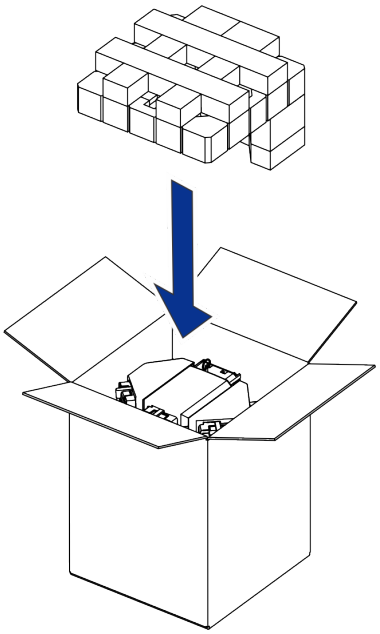

d. Secure the shipping carton with shipping tape.

©2026 Entrust Corporation. All rights reserved.