Installation and Administrator's Guide

Entrust® Datacard® (formerly Sigma)
DS4 Instant Issuance Printer and
DS4-ES1 Instant Issuance Printer
with Embossing Module

June 2026

528063-001, Rev L

Notice

Please do not attempt to operate or repair this equipment without adequate training. Any use, operation or repair you perform that is not in accordance with the information contained in this documentation is at your own risk.

Trademark Acknowledgments

Entrust and the hexagon design are trademarks, registered trademarks and/or service marks of the Entrust Corporation in the United States and other countries.

Datacard is a registered trademark and service mark of Entrust Corporation in the United States and other countries.

MasterCard is a registered trademark of MasterCard International Incorporated.

Visa is a registered trademark of Visa International Service Association.

All other product names are the property of their respective owners.

Proprietary Notice

The design and information contained in these materials are protected by US and international copyright laws.

All drawings and information herein are the property of Entrust Corporation. All unauthorized use and reproduction is prohibited.

Entrust Corporation
1187 Park Place
Minneapolis, MN 55379
Phone: 952-933-1223
Fax: 952-933-7971
www.entrust.com

© 2020-2026 Entrust Corporation. All rights reserved.

Revision Log

Revision	Date	Description of Changes
A	November 2020	First release of this document
B	March 2021	Updated document with new printer features.
C	September 2022	Added SNMP support and other options.
D	January 2023	Added information for the Secure Scramble option.
E	April 2023	Updated electrical requirements information.
F	May 2024	Added certificate management topics.
G	June 2024	Updated printer dimensions.
H	July 2024	Removed 3 input/3 output multi-hopper topics.
J	March 2025	Updated SNMP topics to include v3 support.
K	March 2026	Update document with details on enabling cloud connection.
L	June 2026	Updated printer branding to Datacard.

Contents

Chapter 1: Printer Installation 1
- **PC Requirements** 1
- **Ethernet Requirements** 2
- **Electrical Requirements** 2
- **Site Requirements** 3
  - Printer Dimensions 3
    - Single-Hopper Printer 3
  - Manual Feed Input Hopper Printer 4
  - Multi-Hopper Printer 4
  - Clearance Requirements 5
    - Single-Hopper Printer 5
    - Manual Feed Input Hopper Printer 5
  - Multi-Hopper Printer 6
  - Operating Environment 6
- **Optional Components** 7
  - ES1 Emboss Module 7
  - Rear Indent Module (RIM) 7
  - Durable Graphics Module (DGM) 8
- **Secure Printing Requirements** 9
- **Set Up the Printer** 10
  - Unpack the Printer 10
  - Secure the Printer (Optional) 11
    - Use the Optional Cable Lock 11
    - Use the Bolt-Down Openings 11
  - Load Cards 14
    - Single-Hopper Printer 14
    - Manual Feed Input Hopper Printer 14
    - Multi-Hopper Printer 15
  - Install the Print Ribbon 17
    - Load the Print Ribbon Cartridge 17
    - Install the Prefilled Print Ribbon Cassette 18
- **Connect the Printer to a Computer** 19
  - Connect Using a USB Cable 19
  - Connect Using a Network Cable 19
- **Plug in and Power On the Printer** 20
- **Use the Front Panel** 21
- **Set Up an Administrator in the Printer Dashboard** 21
  - Update Printer Firmware Using Printer Dashboard 22
- **Set the Printer Network IP Address** 23
  - Use IPv4 Addressing 23
    - Set a Static IPv4 Address 24

Use IPv6 Addressing . . . 26
Enable IPv6 . . . 26
Set a Manual IPv6 Address . . . 28
Disable/Enable the Printer . . . 30
Rewritable Printing . . . 31
Enable Rewritable Printing . . . 31
Enable Cloud Connection . . . 33
SNMP Support . . . 34
Supported SNMP versions . . . 34
Enabling SNMP . . . 34
Configuring the SNMP Client Application . . . 36
SNMP Data . . . 37
SNMP Troubleshooting . . . 39
Connecting to an Enterprise Network . . . 40
Connecting to an Authenticated Enterprise Network . . . 40
Preparing your Printer for Authenticated Network Access . . . 40
Username/Password Authentication . . . 40
Username/Password Authentication for wired Ethernet . . . 40
Username/Password Authentication for Enterprise Wi-Fi . . . 41
Certificate Authentication . . . 42
Certificate Authentication for wired Ethernet . . . 42
Certificate Authentication for Enterprise Wi-Fi . . . 43
Adding a TLS Certificate . . . 45
Certificate with Private Key Workflow . . . 46
CSR Workflow . . . 50
Run a SSA Test Card . . . 55
Configure Logical Hoppers . . . 57

Chapter 2: Elements of Card Design . . . 59
Basic Card Design . . . 59
Printing Design . . . 60
Color Printing . . . 60
Full-Panel Ribbon . . . 60
Short-Panel Color Print Ribbon . . . 61
Split-Ribbon Color Printing . . . 61
Manage Color . . . 61
Print Text in Color . . . 61
Print Graphics in Color . . . 62
Types of Color Images . . . 62
Monochrome Printing . . . 62
Monochrome Printing with Full-Color Ribbon . . . 62
Monochrome Ribbon . . . 63
Ribbon Saver . . . 64
Print Text in Monochrome . . . 64
UV Curable Monochrome Ribbon . . . 64

Secure Scramble Monochrome Printing . . . 65
Print Bar Codes . . . 66
Bar Code Guidelines . . . 66
Test Bar Codes . . . 67
Card Design Changes That Affect Bar Codes . . . 68
Print Bar Codes With the Card Printer Driver . . . 68
Apply Topcoat . . . 69
Non-Printing Areas . . . 69
Standard Magnetic Stripe Non-Printing Area . . . 70
Standard Smart Card Non-Printing Area . . . 70
Custom Non-Printing Areas . . . 70
Card Layout . . . 71
Margins . . . 71
Backgrounds . . . 72
Image Placement . . . 72
Magnetic Stripe Design . . . 73
Magnetic Stripe Data Formats . . . 73
Three-Track Option (ISO/IAT) . . . 73
Single-Track Option (JIS) . . . 74
Magnetic Stripe Coercivity . . . 76
Smart Card Design . . . 76
Smart Card Processing Requirements . . . 76
Smart Card Codes on the Printer Label . . . 77
Single-Wire Smart Card . . . 77
Embossing and Indenting Design . . . 78
Settings for Card Design in the Printer Dashboard . . . 79

Chapter 3: Supplies and Parts . . . 81
Print Ribbon . . . 82
Color Print Ribbon . . . 82
Full-Panel Color Print Ribbon . . . 82
Short-Panel Color Print Ribbon . . . 83
Color Print Ribbon Kits . . . 83
Monochrome Print Ribbon . . . 84
Monochrome Print Ribbon Kits . . . 84
UV Curable Monochrome Print Ribbon Kits . . . 85
Ribbon Saver . . . 85
Print Ribbon Storage Guidelines . . . 86
Cards . . . 87
Card Size . . . 87
Card Material . . . 87
New Cards for Color Printing . . . 88
PETG Card Stock Support with UV Curable Print Ribbon . . . 88

Card Quality Guidelines 89
Card Surface 89
Card Handling 89
Card Storage 90
Cleaning Supplies 90
Replacement Parts and Optional Equipment 91
Print Ribbon Cartridge 91
125-Card Input Hopper 91
Cable Lock 91
Cables and Power Supplies 92
Data Cables 92
USB Cable 92
Network Cable 92
USB Smart Card Cable 92
Printer Power Supply 92
Power Cords 93

Chapter 1: Printer Installation

1

This chapter describes system requirements and provides setup instructions for the Entrust® Datacard® (formerly Sigma) DS4 and DS4-ES1 Instant Issuance Printers.

Your installation may have additional requirements for a card production environment. Consult your system administrator to determine the optimum location for card production.

PC Requirements

Use a PC that meets or exceeds the following:

- A 32- or 64-bit processor, running at 2 GHz or faster.
- 4 GB or more memory (RAM) and at least 1 GB free space on the hard drive.
- One of the following operating systems:
  - Windows 11
  - Windows 10, 32- and 64-bit
  - Windows Server 2022
  - Windows Server 2019
- USB 2.0 or newer, Ethernet, Wi-FI, or Cloud connection.
- Entrust Adaptive Issuance™ Instant Financial Issuance (formerly CardWizard) Software

Ethernet Requirements

You can connect multiple network printers to one PC. The maximum number of printers depends on the capacity of the network to deliver data to the printer.

The following components are required to install a printer on a network:

- An Ethernet network that uses the TCP/IP protocol and can run at one of the following:
  1Gbase-T (1 gigabyte per second) or 100base-T (100 megabits per second).
- An Ethernet cable to connect the printer to the network. (An Ethernet cable is not supplied with the printer.)
- A PC that meets the "PC Requirements" on page 1, and is connected to, and communicating with, the network.
- This device is intended to operate in a network environment protected by firewalls and access controls.

Electrical Requirements

The power supply detects the input voltage and works within the range stated.

Electrical Requirements

Input	Output
Universal 100–240Vac, single-phase/ 50–60 Hz/1.6Amp	24V/3.0Amp/72W

If your system includes additional components, refer to the documentation for the appropriate component for its electrical requirements.

Site Requirements

Set up and use the printer in an environment that meets the following requirements.

- Use a single-phase, 3-wire, grounded receptacle.
- Place the system and its supplies in a clean office environment, keeping paper and foreign materials off of the equipment.
- Place the printer on a sturdy, level surface.
- Place the printer away from direct sunlight.
- Do not place the printer near heating ducts, fans, or other air vents.
- Do not use the printer for purposes other than the intended use.
- Provide space for the printer and for clearance around the printer. The printer dimensions and clearance area are shown in the following sections.

Printer Dimensions

The external printer dimensions are shown in the following illustrations.

Single-Hopper Printer

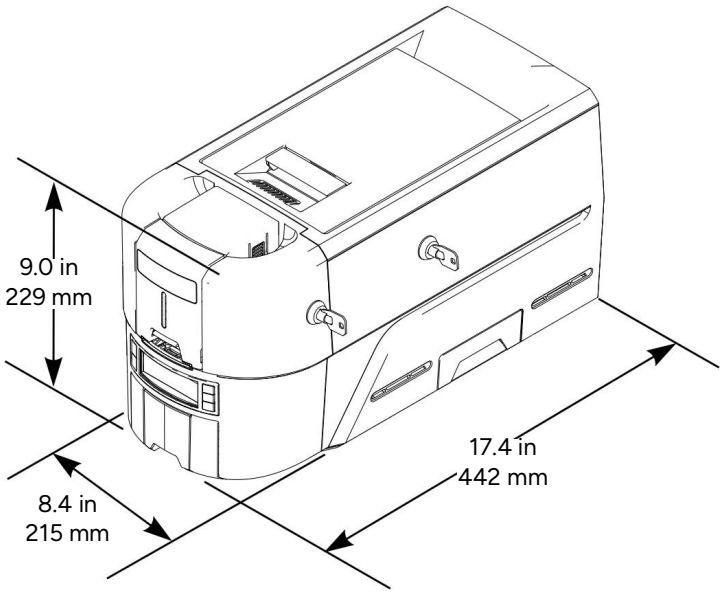

Manual Feed Input Hopper Printer

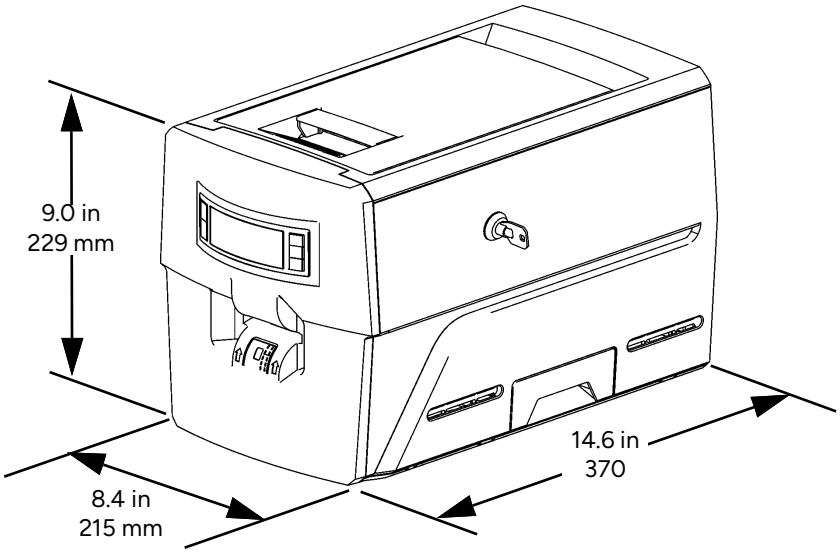

Multi-Hopper Printer

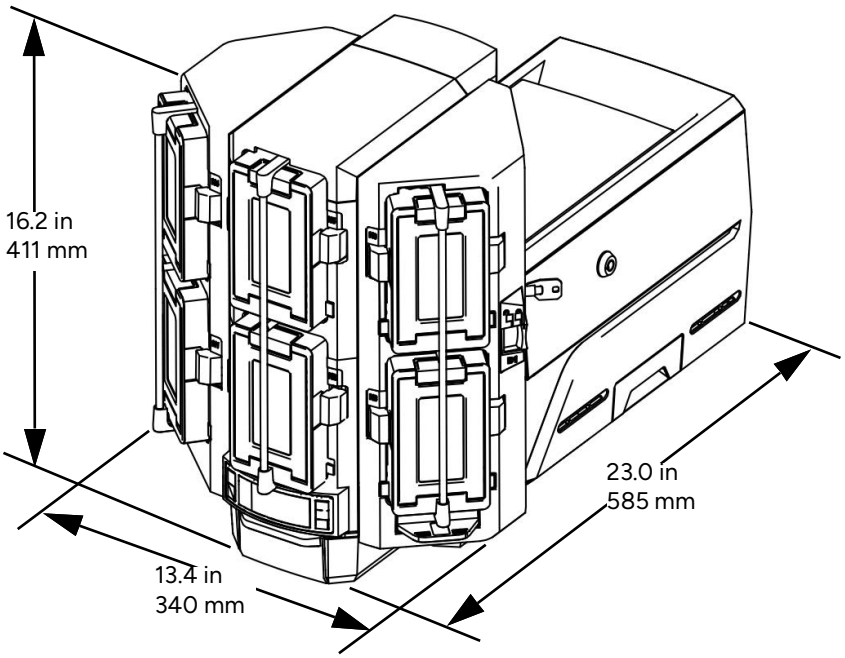

Clearance Requirements

The following measurements show the printer dimensions when the input hopper and printer cover are open and the power cord is connected. Provide at least 3 inches (76.2 mm) of additional clearance around the system to maintain access to the power cord and data cables, to load and remove cards and supplies, and to provide ventilation.

Single-Hopper Printer

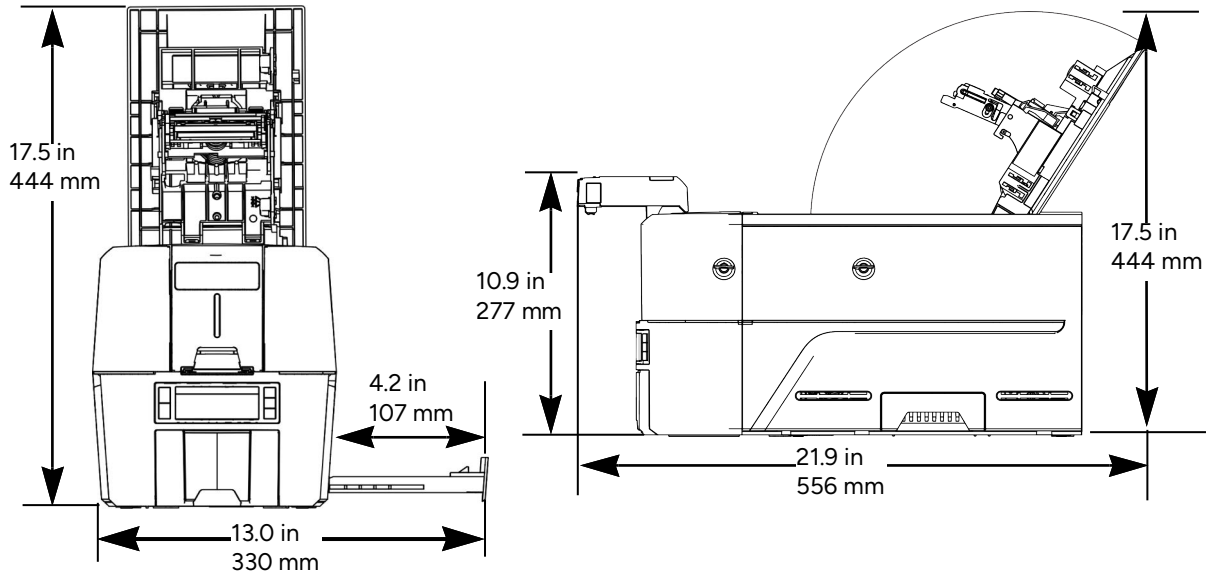

Manual Feed Input Hopper Printer

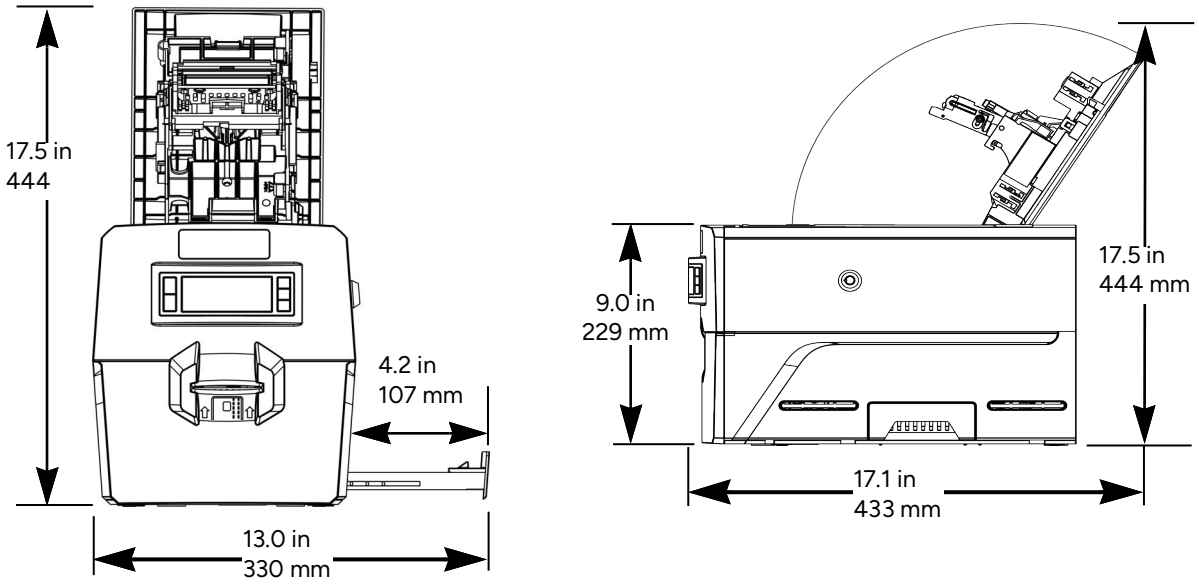

Multi-Hopper Printer

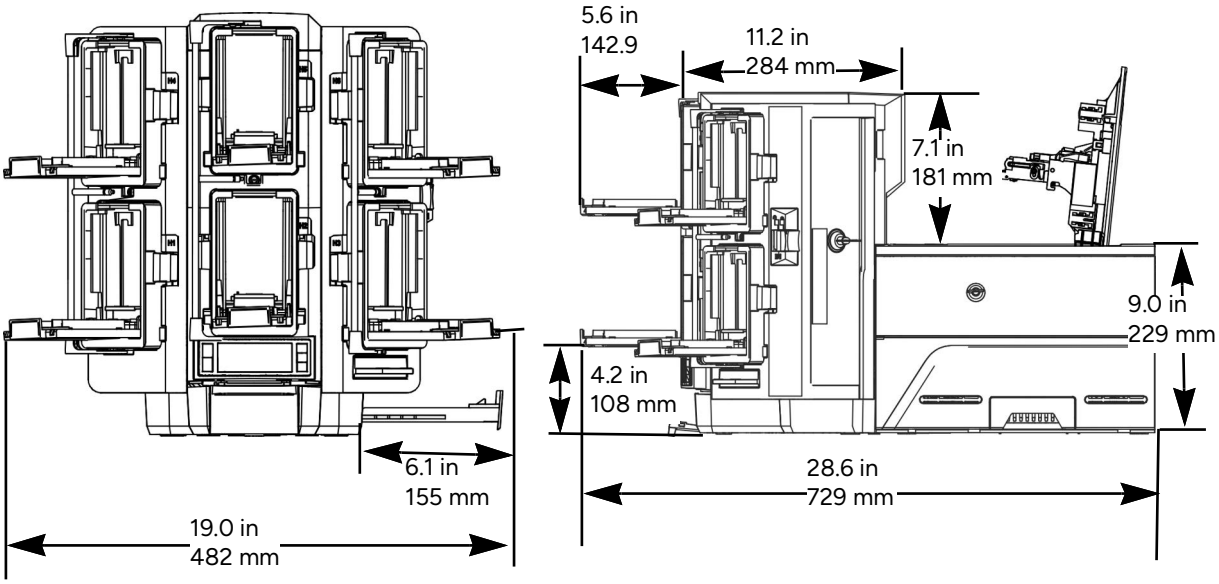

Operating Environment

Use the following guidelines when operating the printer:

Operating temperature	60°–95° F (15°–35° C)
Operating humidity	20–80%, non-condensing

Optional Components

ES1 Emboss Module

The ES1 emboss module can be added to the DS4 printer to add embossing and indent features to the card design. Refer to the *ES1 Emboss Module User's Guide* for more information.

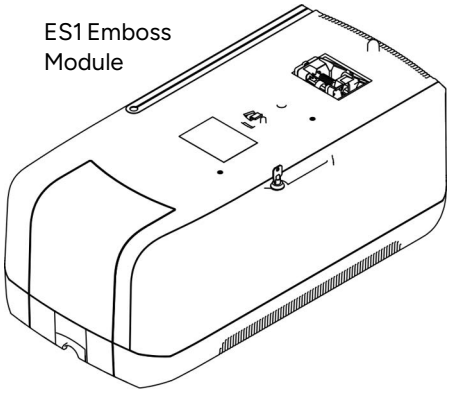

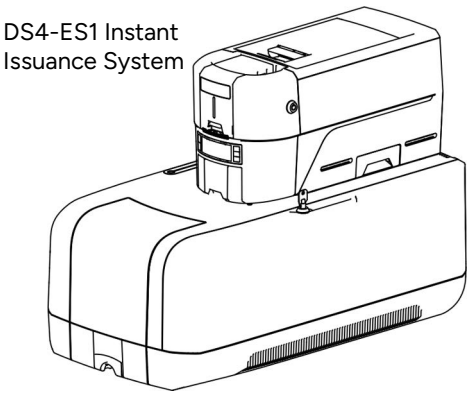

Rear Indent Module (RIM)

The RIM indent module can be added to the DS4 printer to add indenting to the card design. Refer to the *Rear Indent Module (RIM) User's Guide* for more information.

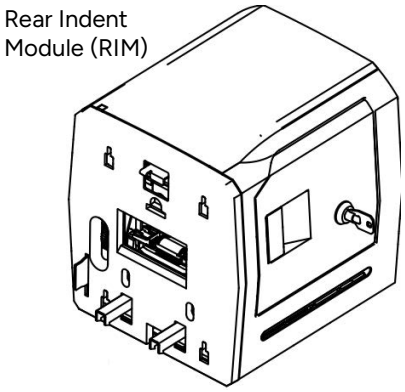

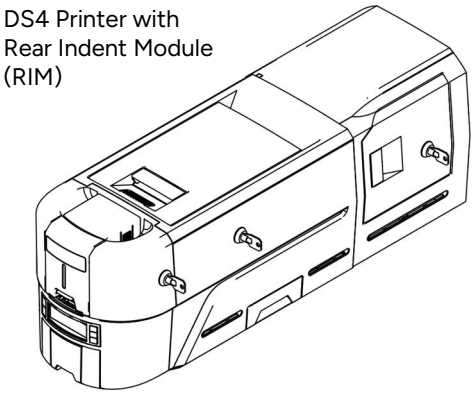

Durable Graphics Module (DGM)

The Durable Graphics Module (DGM) can be added to the DS4 printer to add UV curable graphics to the card design. Printing UV curable graphics with the DGM requires UV print ribbons. Refer to the *Durable Graphics Module (DGM) User's Guide* for more information.

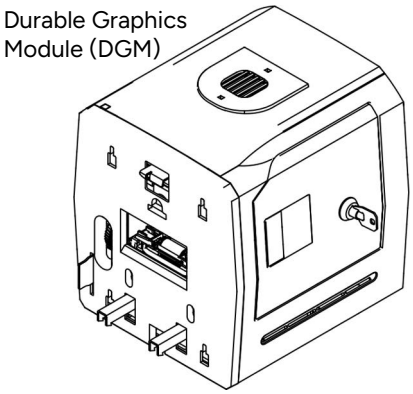

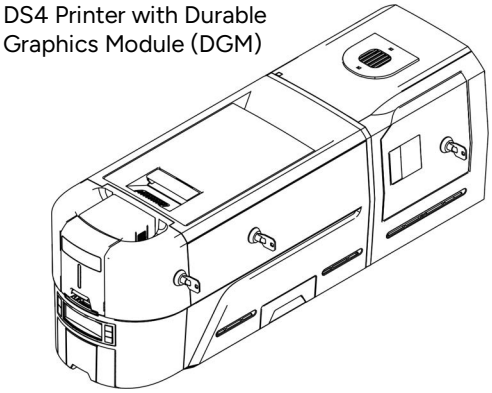

Secure Printing Requirements

Secure printing requires keeping the printer firmware current and using TLS encryption for all card job commands and data sent to the printer. This will ensure card holder data is kept private as it travels across the network.

If your card production site requires secure printing, use the following:

- A DS4 card printer with the TLSEncryptAllCardData setting enabled.
  - Firmware version D4.5.1 or newer is required to use the TLSEncryptAllCardData setting.
  - The printer must be restarted after changing the TLSEncryptAllCardDatasetting for the change to take effect.
- A DS4 card printer with secure printing (DPCL2Secure) enabled and both DPCL and DPCL2 disabled.
- A PC that meets the PC requirements listed in "PC Requirements" on page 1.
- An Ethernet connection that meets the requirements listed in "Ethernet Requirements" on page 2.
- A current browser.
- The latest released version of printer firmware. New firmware releases integrate updated component versions and patches for increased reliability and security.
- Printers manufactured with D4.5.1 or newer firmware ship with SNMP disabled. If SNMP is required for network management, be aware that SNMP v2 transmits data unencrypted, which could expose printer information. To keep SNMP information secure, use SNMP v3 and configure the printer to not respond to SNMP v2 requests by setting SNMPMinVersion to SNMPv3.

Set Up the Printer

Use the information in the following sections to set up the printer to print cards.

Unpack the Printer

1. Remove the accessories tray and printer from the shipping carton.

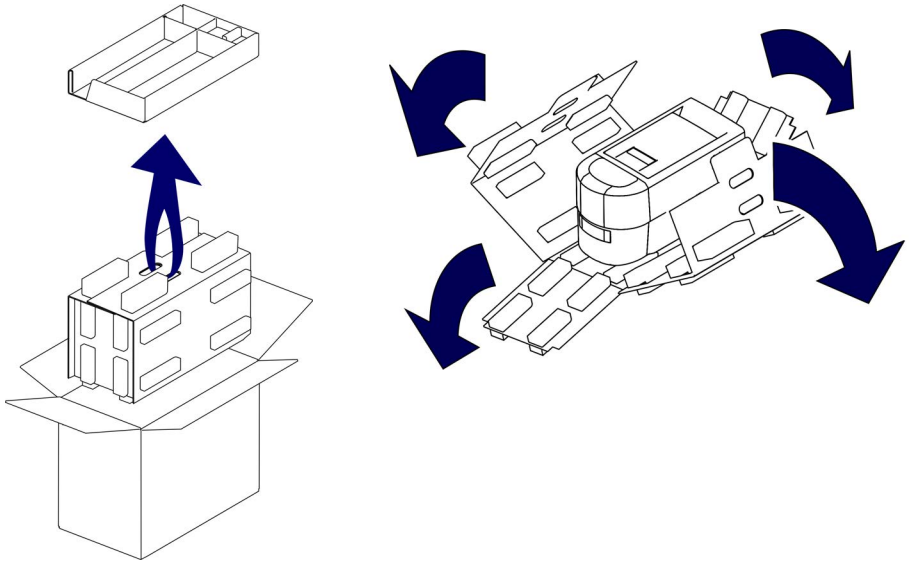

The accessories tray holds the printer power supply and power cord, a print ribbon, keys (for locking printers), cleaning swabs, and .

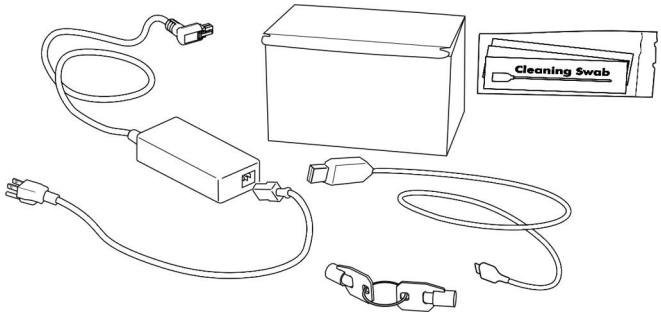

Save the shipping cartons and packing materials. They are required if you need to store, move, or return the system for service.

2. Place the printer on the selected work surface. Make sure that the surface meets the requirements described in "Site Requirements" on page 3.

Secure the Printer (Optional)

You can secure the printer using one of the following:

- An optional cable lock (refer to "Use the Optional Cable Lock").
- Bolt-down openings in the bottom of the printer (refer to "Use the Bolt-Down Openings").

Use the Optional Cable Lock

The cable lock is a user-installed feature that does not require special tools to install. The package contains a cable lock, a metal security plate, and instructions. The security plate is installed in the printer and is designed to accommodate the T-bar of the cable lock.

The cable lock is available with either a key or combination lock.

1. Prepare the printer by installing the metal security plate:
   a. Tip the printer on its right side.
   b. Locate the security plate receptacle on the back left side of the printer.
   c. Insert the security plate into the receptacle with the open end toward the printer.
   d. Insert the T-bar of the cable lock through the printer opening into the security plate.
2. Follow the instructions included with the cable lock to complete the installation.

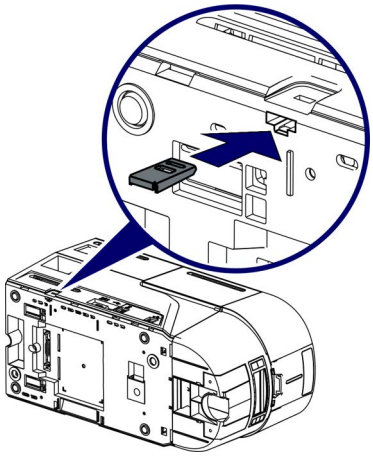

Use the Bolt-Down Openings

The printer includes bolt-down openings that you can use to secure it to a mounting surface.

You need the following supplies:

- The bolt-down kit (part no. 529349-001) contains two M6 well nuts.
- Two M6 (6 mm) screws, purchased separately.

  The length of the screws you need depends on the thickness of the mounting surface. The screw length is the surface thickness + 0.75 inch (20 mm).
- Two M6 washers, purchased separately.
- 1/4-inch (7 mm) drill bit.

1. Drill two holes in the mounting surface following the dimensions and requirements shown in the following figure.

A paper template (part no. 528119-001) that you can place on the mounting surface to help identify the hole locations also is available.

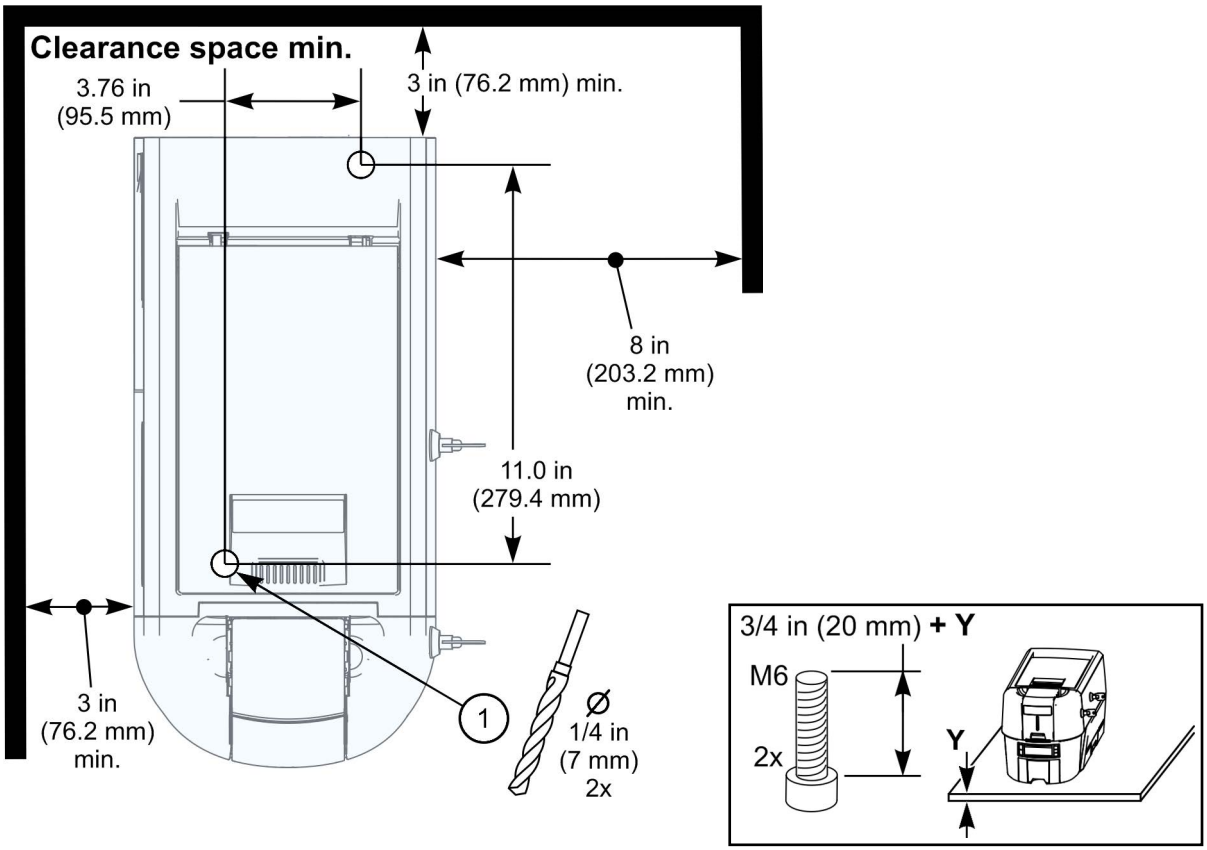

2. Carefully tip the printer onto its left side.
3. Insert the M6 well nut threaded inserts into the bolt-down openings on the bottom of the printer.
4. Return the printer to its upright position and position it over the holes that are drilled in the mounting surface.
5. Secure the printer to the mounting surface.
   a. Place a flat washer on each of the screws beneath the mounting surface.
   b. Insert the M6 screws through the holes in the mounting surface and into the well nuts in the bottom of the printer.
   c. Tighten the screws securely.

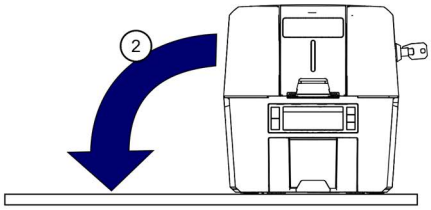

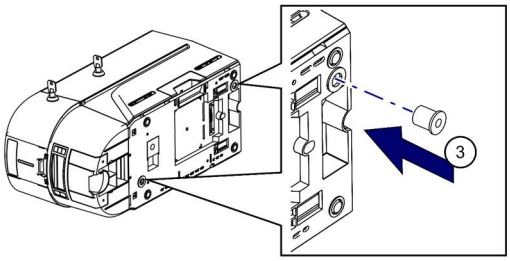

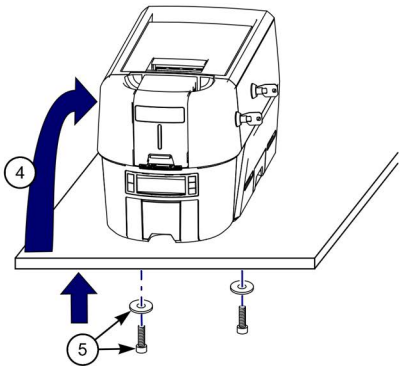

Load Cards

If you plan to insert cards through the exception slot, make sure that blank cards are available near the printer.

- Handle cards by the edges only, or wear approved card inspection gloves.
- Cards can stick together. Slide or fan the cards to separate the edges before placing them in the input hopper.
- Insert ISO magnetic stripe cards with the stripe (back side) facing down and to the right.
- Insert smart cards with the smart card chip facing up and toward the back of the hopper.

A diagram inside the input hopper shows the correct orientation for each type of card.

Single-Hopper Printer

1. Open the input hopper door. If your printer has locks, unlock the hopper lock to open the input hopper.
2. Load the cards into the input hopper. The hopper can hold up to 125 cards.
3. Close and lock the input hopper.

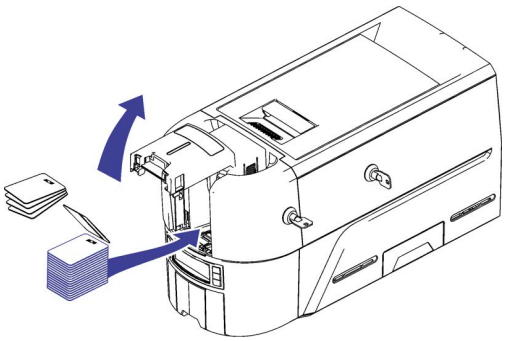

Manual Feed Input Hopper Printer

Printers equipped with a manual feed input hopper require cards to be loaded individually when requested. Condition 170 will display on the front panel when a print job is requesting a card to be loaded.

1. Hold the card by the edges and slide the card into the manual input slot.
2. Push the card all the way into the manual input slot until it is picked.

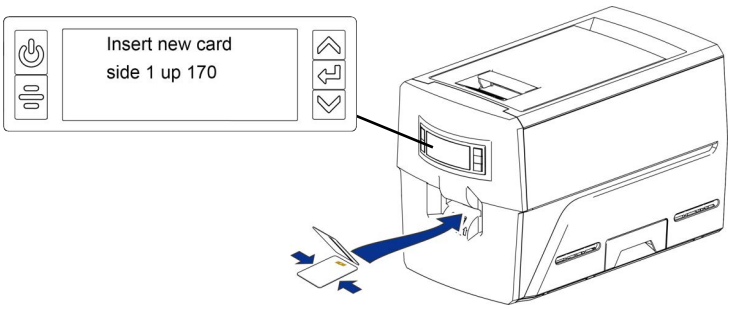

Multi-Hopper Printer

1. Unlock the multi-hopper lock, if the multi-hopper has locks.
2. Slide the lock bar release button (B1) to the left to release the hopper lock bars, if the multi-hopper has locks.
3. Rotate a lock bar to the left to provide access to the multi-hopper input cartridge that you want to load, if the multi-hopper has locks.

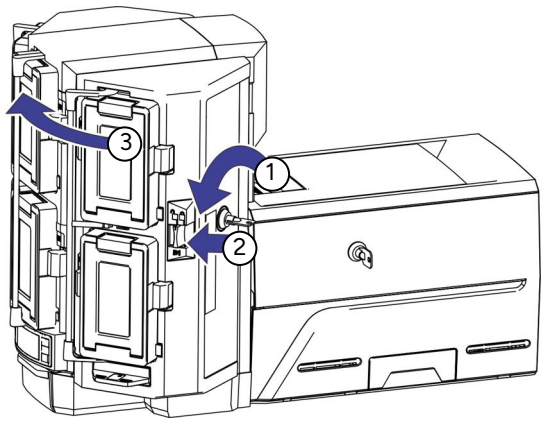

4. Press the cartridge release button at the top of the cartridge and open the cartridge door.
5. Lift the card weight to the top of the cartridge and gently pull it forward until it locks in position.

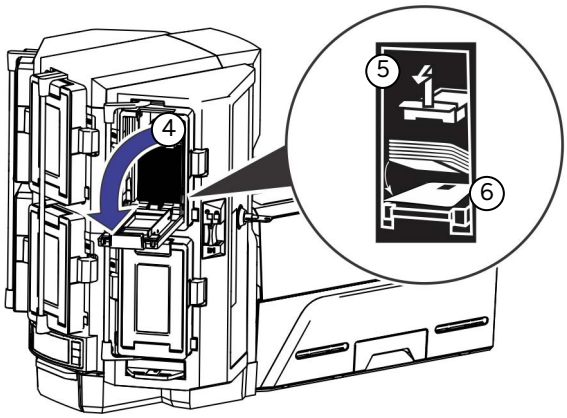

6. Load the cards into the input hopper cartridge. Handle the cards by the edges only, or wear approved card inspection gloves.

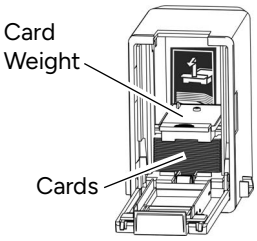

- The diagrams inside the cartridge show how to position the card weight and load cards. Do not place the cards on top of the card weight.
- You do not need to remove the cartridge from the multi-hopper to load cards.

7. Close the cartridge door. This releases the card weight so that it is lowered on top of the cards.
8. Follow step 3 through step to load cards into each input hopper cartridge.
9. Rotate all the lock bars back into position.
10. Slide the lock bar release button to the right to lock the lock bars into place.
11. Lock the multi-hopper.

Caution: The lock bars, lock bar release button, and the multi-hopper door lock all must be in the lock position for the printer to operate. If any of the locks are left in the unlock position, the printer issues an error. You must unlock and re-lock all locks to clear the error and place the printer in **Ready** status.

Install the Print Ribbon

Depending on the printer model, the print ribbon is available as a replaceable roll that you install on the print ribbon cartridge, or a prefilled print ribbon cassette.

Load the Print Ribbon Cartridge

The print ribbon cartridge ships inside the printer.

1. Pull up the cover latch handle and open the printer cover. Remove the print ribbon cartridge.

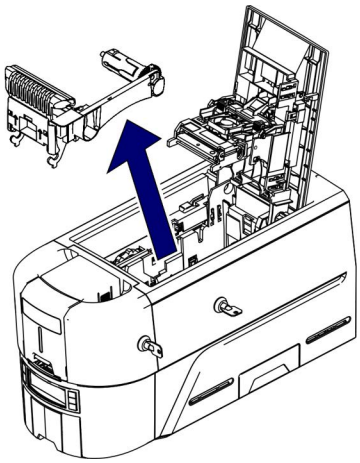

2. Load the print ribbon.
   a. Load a full roll of print ribbon (the purple spool) onto the purple spindle closest to the cartridge handle until it clicks into place.
   b. Place the silver take-up spool on the silver take-up spindle until it clicks into place.
   c. Wind the take-up spool counterclockwise one full turn.

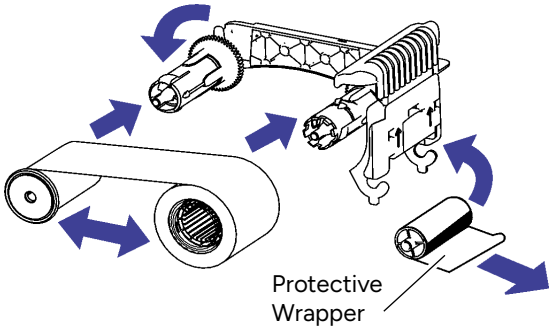

3. Lift the cleaning retainer and load the cleaning roller on the ribbon cartridge.
4. Remove the protective wrapper from the cleaning roller.

Load a new cleaning roller with each new roll of print ribbon. Replace it between ribbon changes if you notice debris on the printed cards, or if the cleaning roller is no longer sticky.

5. Install the print ribbon cartridge in the printer.
   a. Hold the ribbon cartridge by the handle and lower it into the printer with the handle toward the front of the printer.
   b. Position the ribbon cartridge in the guides.
6. Close the printer cover. Press down on the ridges on the front of the cover to make sure that it latches completely.

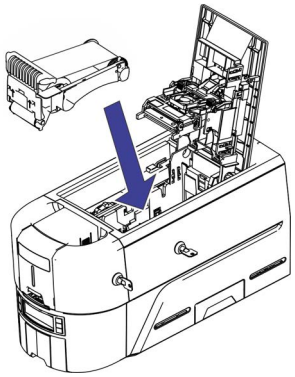

Install the Prefilled Print Ribbon Cassette

The prefilled print ribbon cassette is an all-in-one, one-time-use print ribbon, cleaning roller, and ribbon cartridge.

1. Open the cassette package and remove the print ribbon cassette.

   The cassette is shipped in a closed position.

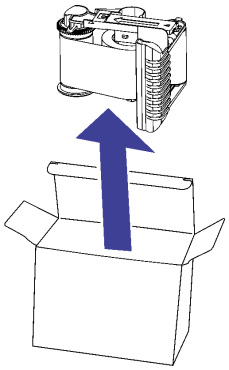

2. Extend the cassette to its fully open position.

   Pull out the front of the cassette until it clicks.
3. Remove the protective wrapper from the cleaning roller.

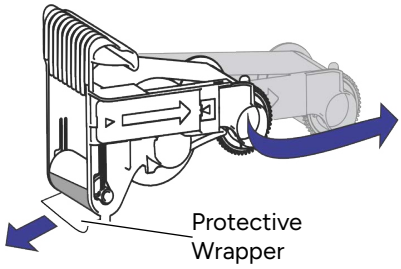

4. Install the cassette in the printer.
   a. Hold the ribbon cassette by the handle and lower it into the printer with the handle toward the front of the printer.
   b. Position the ribbon cassette in the guides.
5. Close the printer cover. Press down on the ridges on the front of the cover to make sure that is latches completely.

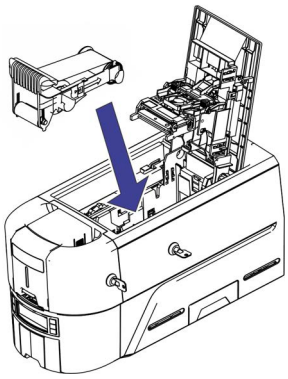

Connect the Printer to a Computer

You can connect the printer to a Windows-based PC using either a USB cable, or through a network using an Ethernet cable (the Ethernet cable is not supplied with the system).

Connect Using a USB Cable

If you plan to use the XPS Card Printer Driver, do not connect the USB cable to the computer until you are prompted during installation of the Driver. Refer to the *XPS Card Printer Driver User's Guide* to set up the Card Printer Driver to work with the printer.

1. Connect one end of the USB cable to the USB port of the printer.
2. Connect the other end to a USB port on the PC.

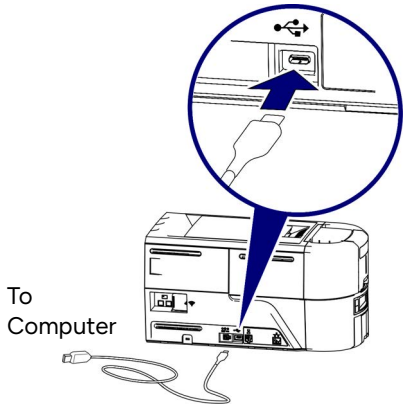

Connect Using a Network Cable

1. Connect one end of the Ethernet cable to the network connection port on the printer.
2. Connect the other end to a network port.

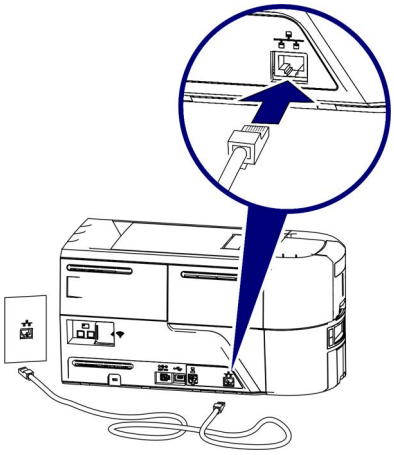

Plug in and Power On the Printer

1. Connect the printer power supply to the printer.
2. Connect the power cord to the power supply.

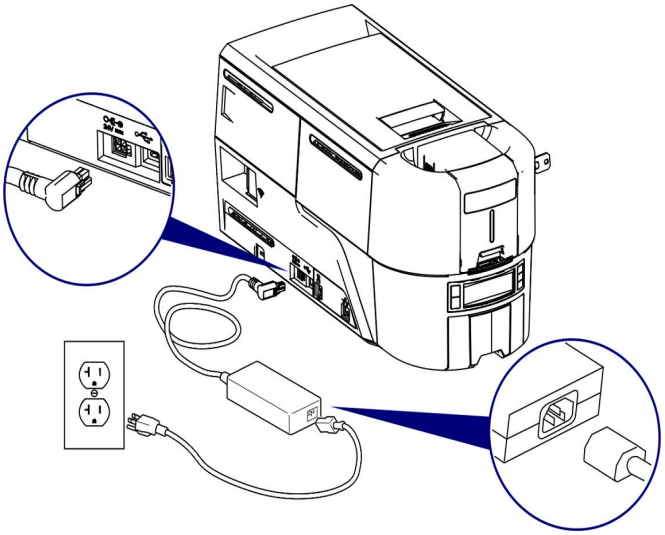

3. Connect the power cord to the facility power source.
4. Press the POWER button on the front of the printer. The front panel LCD displays **Ready** when the printer is powered on and ready to print cards.

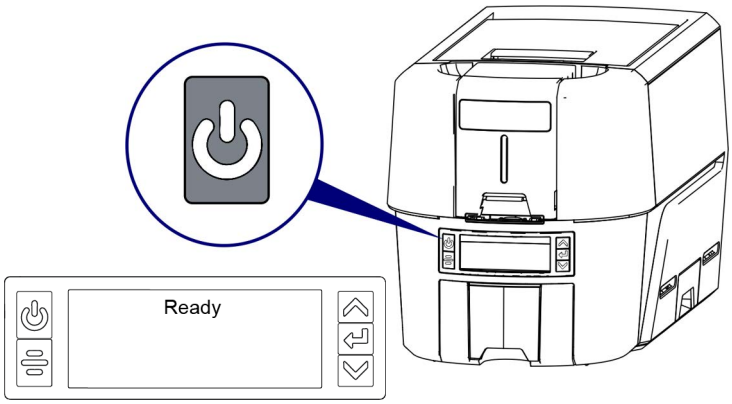

Use the Front Panel

The front panel of the printer provides the controls you need to operate the printer. Refer to the printer's *User's Guide* for complete information about using the front panel.

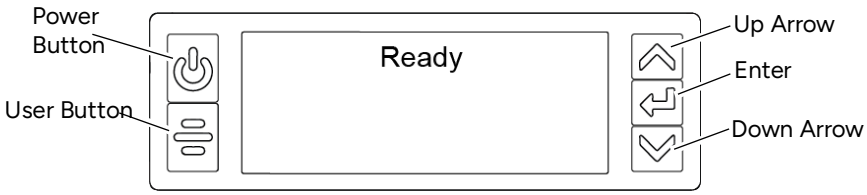

Set Up an Administrator in the Printer Dashboard

The Printer Dashboard is a web-based printer management tool. You can access the Printer Dashboard using one of the following methods:

- Enter the printer's IP address in a browser window. For example, https://12.3.45.678.
- Scan the QR code on the printer front panel with a mobile device when the printer IP address is displayed (refer to the printer's *User's Guide* for more information).
- Double-click the Printer Dashboard icon on the computer desktop.

The first time you start the Printer Dashboard, you must set up an administrator account to sign in to the dashboard. The administrator then can set up user accounts for all users who require access to the Printer Dashboard.

Do the following to set up the administrator account.

1. Display the Printer Dashboard sign in window.

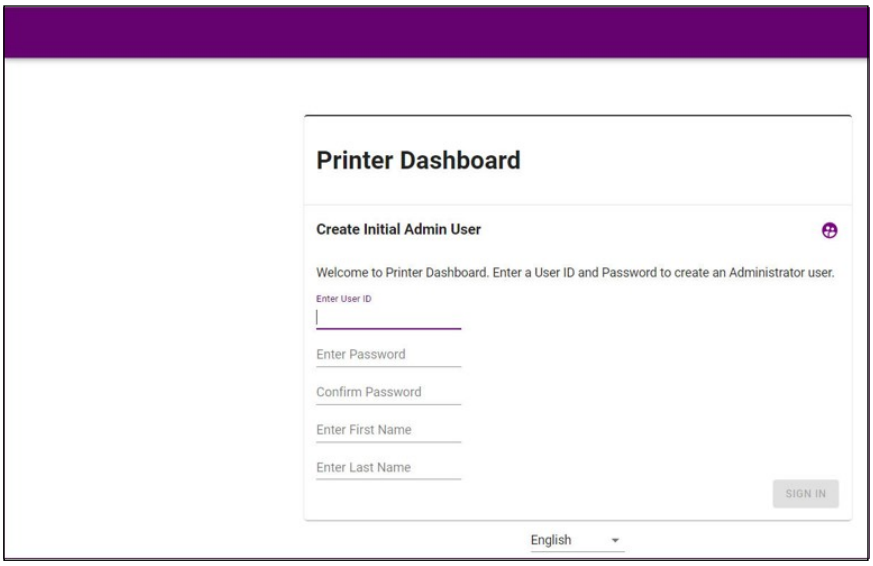

2. Complete the Create Initial Admin User fields with the user name and password information, and the name of the Admin user.
3. Click **Sign In** to launch the Printer Dashboard.

After you sign in to the Printer Dashboard, refer to the Printer Dashboard Help for complete information about how to define additional user accounts and use the dashboard.

The printer contains an embedded open source attribution report that you can access from the Printer Dashboard. Refer to the Printer Dashboard Help for complete information about how to view and print the report.

Update Printer Firmware Using Printer Dashboard

The printer firmware can be updated using Printer Dashboard. The Firmware panel on the home page of Printer Dashboard displays the current firmware version installed.

An Internet connection is required to update the printer firmware using Printer Dashboard.

- If the indicator is green, the firmware is current.
- If the indicator is red, the firmware is not current. Click **Update** to update the printer firmware.
- If the indicator is yellow, the printer needs to be connected to the Internet to update the printer firmware.

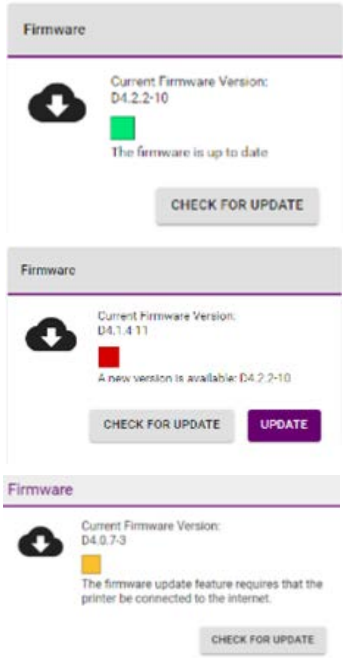

Updating the printer firmware will also update the firmware of attached components such as the ES1 Emboss Module and LCM (Light Curing Module). The firmware for installed single wire smart card readers (DUALi or OMNIKEY) will also be updated depending on the value of SmartCardFirmwareVersion setting in Printer Dashboard. Click **Configuration** > **Settings** > **Behavior** > **SmartCardFirmwareVersion**.

- **AutoUpdate** will automatically update the smart card reader firmware to the preferred version contained in the printer firmware.
- **UseCurrent** will not update the smart card reader firmware.

Set the Printer Network IP Address

You need the printer IP address to perform some tasks. For example, use the IP address to access the Printer Dashboard from a browser window. You also need the IP address to define the printer to Instant Financial Issuance (formerly CardWizard) software.

To display the network IP address, you can do one of the following:

- Press the up or down arrow key on the front panel while the printer displays **Ready**.
- Use the LCD menu system Status menu. Refer to the printer's *User's Guide* for more information about using the Status menu to display the IP address.

The card printers support both IPv4 and IPv6 addressing. If your network environment uses IPv6 you can use the LCD Configuration menu to enable the IPv6 settings that manage the printer communication over an Ethernet network. You do not need to make any configuration changes to use IPv4.

You also can use the Printer Dashboard to change the communication method and define printer address information. Refer to the Printer Dashboard Help for complete information.

Use IPv4 Addressing

When you use IPv4, the printer can use either of the following network communication methods:

- **DHCP (Dynamic Host Configuration Protocol)**—The network automatically assigns the IP address to the printer. The IP address of a printer that uses DHCP can change if the printer is powered off and back on.
- **Static IP**—You set the IP address, subnet mask, and gateway address, as provided by your network support personnel. A static IP address does not change when the printer is powered off.

  Instant Financial Issuance software requires that the printer use a static IP address. Refer to "Set a Static IPv4 Address" on page 24.

Set a Static IPv4 Address

Instant Financial Issuance software requires that the printer have the same IP address at all times. Because the default communication method is DHCP (Dynamic Host Configuration Protocol), you must change the address method and assign a static IP address before you can define the printer to Instant Financial Issuance software.

- You can set a static IP address on a printer even if it is not connected to the network. For example, a group may set up several printers in a central location before installing them at individual sites.
- When the printer is configured to use a static IP address, the printer's front panel displays the address even when the printer is not connected to a network. In addition, the LCD displays a "+" if the network is active, or a "-" if the network is inactive, as a prefix to the static IP address.

1. Obtain the following values from your network support personnel. Make sure that you receive all three values:
   - IP address
   - Subnet mask
   - Gateway address

You also can set a static IP address using the Printer Dashboard (refer to the Printer Dashboard Help for more information).

2. Begin with the printer in **Ready** status. Press the USER button to suspend the printer.

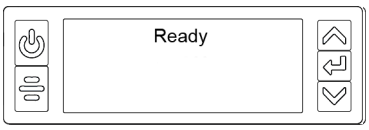

3. Press ENTER to enter the menu system.

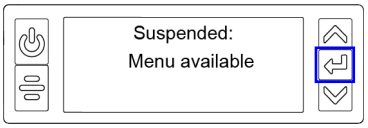

4. Press the down arrow until **Configuration** displays on line 3.

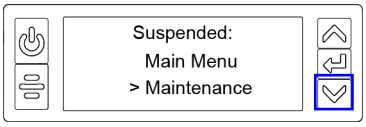

5. Press ENTER to enter the Configuration menu.

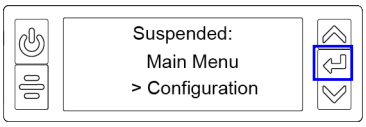

   a. Press ENTER to enter the Network IPv4 menu.

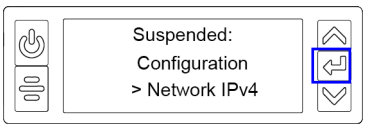

b. **DHCP/Static IP** displays on line 3. Press ENTER to select an address method.

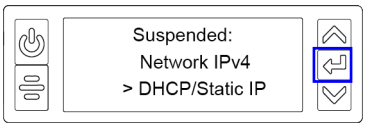

c. Press the up or down arrow to display **Static IP** on line 3.

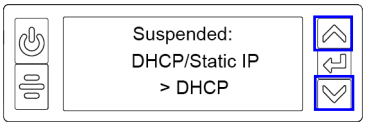

d. Press ENTER to enter the Static IP menu.

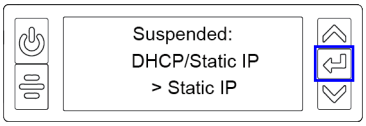

6. Set the static IP address, subnet mask, and gateway address.

a. Press ENTER with IP Address on line 3 to set the static IP address.

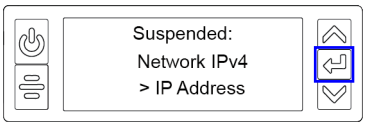

The IP address has four sections, separated by periods.

i. The address section shows three digits when it can be changed. Use the arrow keys to change the right-most digit one number at a time. Press ENTER to save the value and navigate to the next section of the address.

ii. Press ENTER when all four sections are correct. The next section of the address entry (Subnet Mask or Gateway Address) displays on line 3.

b. Repeat step a to enter the subnet mask and gateway address.

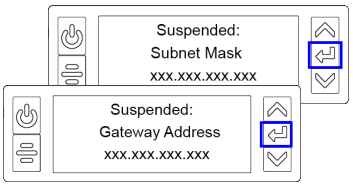

7. Press ENTER when you finish entering all the required address information. **Apply** displays on line 3.

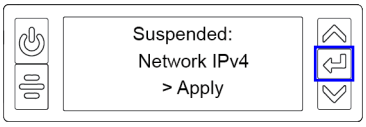

8. Press ENTER to apply your changes.
9. Press the down arrow key until **Exit** displays on line 3.
10. Press ENTER. Then, press the USER button to return the printer to **Ready**.
11. Power off and restart the printer to verify that the static IP address is correct.

Use IPv6 Addressing

The expanded address space provided by IPv6 is becoming increasingly common in network environments. A printer on an IPv6 network can be configured to use one or more of the following methods, depending on how the network is set up:

- **Link Local IPv6 address:** The printer and PC clients are restricted to the same subnet. Link local is enabled automatically when IPv6 is enabled and offers the best security for your network.
- **DHCPv6:** A DHCPv6 server is externally configured to give out an IPv6 address.
- **Stateless Address AutoConfiguration (SLAAC):** One or more routers with IPv6 enabled on the subnet give out a subnet prefix that allows access to IP addresses.
- **Manual IPv6 Address:** The printer has a designated IPv6 address on a specified subnet. The address does not change without manual intervention. This is similar to an IPv4 static IP address.

To use IPv6 with the card printer, you need to connect to an IPv6 network and enable one or more address configuration methods. Link local, DHCPv6, and SLAAC automatically configure an address, but may require the necessary network support (DHCPv6 and routers). Refer to "Enable IPv6" for complete information about how to enable IPv6.

This Guide assumes that your IPv6 network is configured and that you have the information you need to set up the card printer. If you need information about your network configuration, contact your network administrator.

Enable IPv6

Use the front panel Configuration menu to enable the IPv6 option used by your network. You also can enable IPv6 using the Printer Dashboard (refer to the Printer Dashboard Help for more information).

1. Begin with the printer in **Ready** status. Press the USER button to suspend the printer.

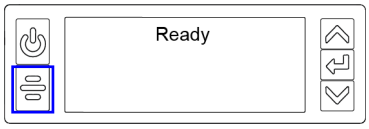

2. Press ENTER to enter the menu system.

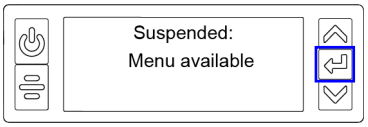

   a. Press the down arrow until **Configuration** displays on line 3.

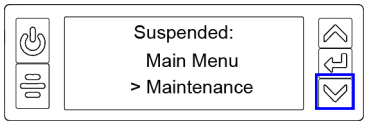

b. Press ENTER to enter the **Configuration** menu.

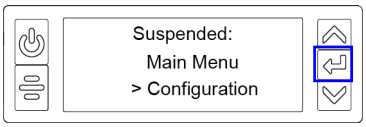

c. Press the down arrow to display **Network IPv6** on line 3.

d. Press ENTER to enter the **Network IPv6** menu.

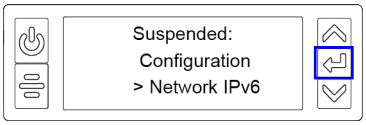

3. Set the IP Mode.

   The IP Mode determines whether the printer uses IPv4-only or both IPv4 and IPv6 addressing.

   a. Press ENTER to enter the IP Mode menu.

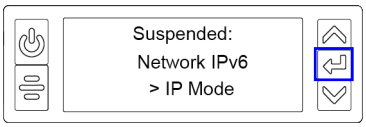

   b. Press the down arrow to display **DualStack** on line 3. Specifying DualStack allows the printer to use both IPv4 and IPv6 addresses.

   c. Press **Enter** to set the IP Mode.

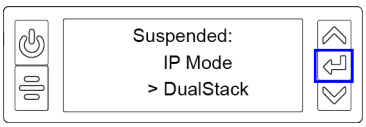

   The IP Mode must be set to **DualStack** to allow any of the following settings to be used. If you want to use IPv4-only in the future, change the IP Mode to IPv4. The printer retains the IPv6 settings specified below, but they are not used. This allows you to return to IPv6 at a later time.

4. Press the down arrow until the type of addressing you want to enable displays on line 2.

   - DHCPv6
   - SLAAC
   - Manual

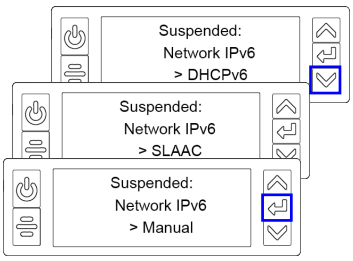

   The printer can have multiple IPv6 addresses, depending on your network environment. All of the IPv6 addresses can be used to access the printer.

5. Press ENTER to open the selected address menu.

6. Press the arrow keys to enable the IPv6 address method.

7. Press ENTER to confirm your selection.

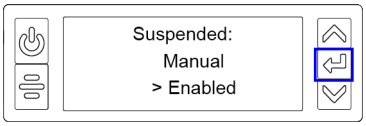

If you enabled DHCPv6 or SLAAC, the printer automatically obtains one or more IP addresses. If you want to enter a manual IP address, refer to "Set a Manual IPv6 Address" on page 28.

Set a Manual IPv6 Address

If you want the printer to keep the same IPv6 address at all times, you can enter a manual address using the Configuration menu. (This is similar to setting a static IPv4 address.)

> You also can enter the IPv6 address using the Printer Dashboard. If you launch the Printer Dashboard from a browser window, you must use an IPv4 address before you can set the IPv6 address. The Printer Dashboard allows you to type the IPv6 information instead of using the printer front panel. Refer to the Printer Dashboard Help for more information.

1. Obtain the following values from your network support personnel. Make sure that you receive all values:
   - IPv6 address
   - IPv6 subnet prefix length
   - Gateway address

   Make sure that the IPv6 manual address method is enabled. Refer to "Enable IPv6" on page 26.

   When you enable IPv6 manual addressing, **Manual Address** displays on line 3. Press ENTER to start entering the IP address.

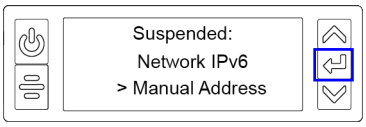

2. Enter the IPv6 address.

   An IPv6 address is represented as eight groups of four hexadecimal digits separated by colons. The address requires 39 characters to display. Because the LCD displays a limited number of characters per line, the IPv6 address is spread across three screens of the front panel. A digit at the end of line 2 indicates which section of the address is being displayed.

   a. Use the arrow keys to change each hexadecimal digit, from 0 to F.
   b. Press ENTER to change the next digit.
   c. When the address section on the first screen is complete, press ENTER to display the next section of the address.

3. When all three sections are correct, press ENTER to save your changes. Then, press the down arrow to display **Prefix Length** on line 3.

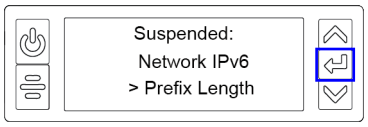

4. Press ENTER to view or change the prefix length.

   The prefix length indicates the boundary between the subnet to which the host is connected and the device ID in the IPv6 manual address. Press the up or down arrow to change the prefix length.

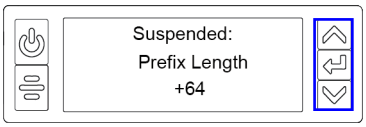

5. Press ENTER to save your changes. Then, press the down arrow to display **Gateway Address** on line 3.

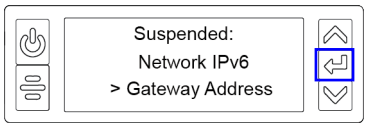

6. Press ENTER to enter the default gateway address.

   a. Follow the procedure described in step 2 to enter the gateway address.

   b. When all three screens are correct, press ENTER to save the gateway address.

7. Press the down arrow until **Exit** displays on line 3.

8. Press ENTER. Then, press the USER button to return the printer to **Ready**.

Disable/Enable the Printer

If your site security requires that the printer is to be disabled or enabled, use the Activate menu from the LCD panel.

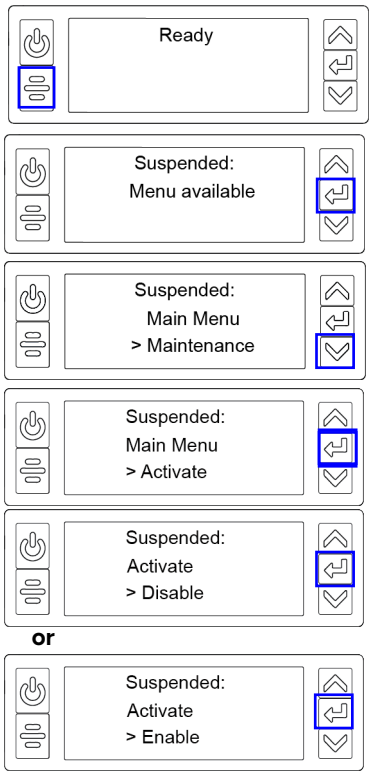

1. Begin with the printer in **Ready** status. Press the User button.
2. **Suspended** displays on line 1 of the LCD panel. Press Enter to enter the menu system.
3. **Maintenance** displays on line 3. Press the down arrow until **Activate** displays on line 3.
4. Press Enter to enter the **Activate** menu. Press the down arrow to select **Disable** or **Enable** on line 3.

   Press the up and down arrows to cycle through the alphabetic and numeric characters. Press ENTER to select each character to enter an 8-digit code.

   Enter any 8-digit number to disable the printer. Write down the code used to disable the printer. The printer cannot be enabled again without the correct code.

   After entering the 8-digit code, press ENTER again with a blank character entry.

   Press ENTER to apply the code. When the system deactivates, Request Success displays briefly on the LCD panel, and then Ready displays.

Rewritable Printing

Optional rewritable printing is available on some printer models. Rewritable cards and printer setup are required for rewritable printing.

Enable Rewritable Printing

1. Begin with the printer in **Ready** status. Press the User button.
2. **Suspended** displays on line 1 of the LCD panel. Press Enter to enter the menu system.
3. **Maintenance** displays on line 3. Press the down arrow until **Configuration** displays on line 3.
4. Press Enter to enter the **Configuration** menu.
5. **Network IPv4** displays on line 3. Press the down arrow until **Rewrite Enable** displays on line 3.
6. Press Enter to enter the **Rewrite Enable** menu.

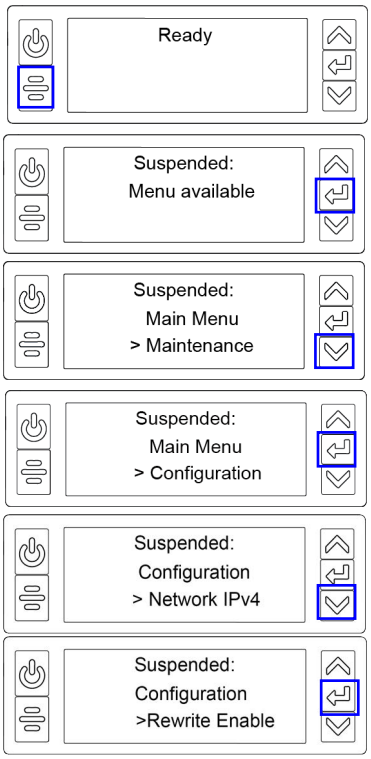

7. **Disable** displays on line 3. Press the down arrow until **Enable** displays on line 3.
8. Press Enter to enable rewritable printing.
9. Press the User button repeatedly to exit the menu system.
10. Press the power button to power off and power on the printer. The rewrite Icon will display on the LCD panel.

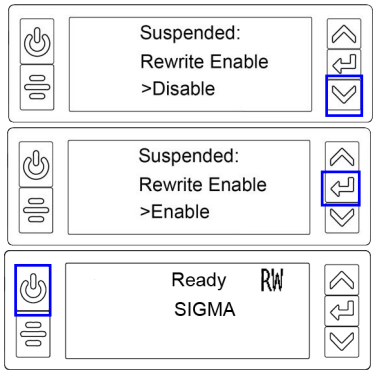

Specify rewritable card settings in the card printer driver when using the driver. For complete information about setting up the card printer driver to print rewritable cards, refer to the *XPS Card Printer Driver User's Guide*.

Enable Cloud Connection

1. Begin with the printer in **Ready** status. Press the User button.
2. **Suspended** displays on line 1 of the LCD panel. Press Enter to enter the menu system.
3. **Maintenance** displays on line 3. Press the down arrow until **Configuration** displays on line 3.
4. Press Enter to enter the **Configuration** menu.
5. **Network IPv4** displays on line 3. Press the down arrow until **Network Cloud** displays on line 3.
6. Press Enter to enter the **Network Cloud** menu.
7. **Cloud Location** displays on line 3. Press Enter to enter the **Cloud Location** menu.
8. Press the down arrow to view the regions for the cloud connection. Press Enter to select the Cloud Location.
9. **Apply** displays on line 3. Press Enter to apply the selected region for the Cloud Location.
10. **Cloud Location** displays on line 3. Press the down arrow until **Cloud Connection** displays on line 3.
11. Press Enter to enter the **Cloud Connection** menu.
12. Press Enter to enter to **Enable** Cloud Connection.
13. **Apply** displays on line 3. Press Enter to enable the Cloud Connection.
    - A cloud icon displays on the front panel ready screen when cloud is enabled and the printer has a cloud connection.
    - A cloud icon with a strike through displays on the front panel ready screen when cloud is enabled but the printer does not have a cloud connection.

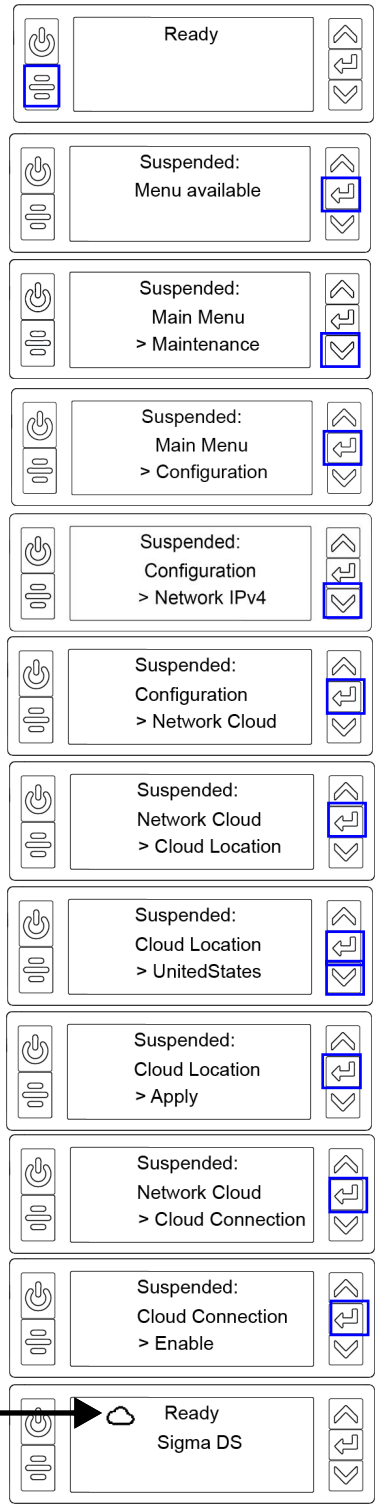

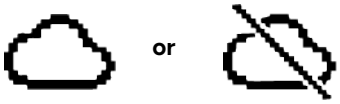

SNMP Support

The printer supports Simple Network Management Protocol (SNMP) providing limited printer information and status to SNMP enabled monitoring applications. Supported OID's are listed in the SNMP Data section.

Supported SNMP versions

- SNMP v2c is supported by printers running D4.1.3 or later firmware.

  Setting the SNMP v2c read-only community string is supported by printers running D4.4.1 or later firmware.

  SNMP v2 transmits data unencrypted and could expose printer information. In Printer Dashboard, click **Configuration** > **Communication** and set the **SNMPMinVersion** to **SNMPv3** to not respond to SNMP v2 requests.

- SNMP v3 is supported by printers running D4.4.1 or later firmware.

Enabling SNMP

A printer must have the SNMP port enabled before it will respond to SNMP queries.

1. Ensure printer is running D4.4.1 firmware or later. If not, update printer firmware.
2. Log into Printer Dashboard with an Admin account.
3. Click **Configuration** > **Settings** > **Behavior**.
4. Scroll to **SNMP** and set value to **Enabled.**

5. Enter settings for the SNMP version that will be used.
   a. For SNMP v3, provide values that match the SNMP monitoring solution for the following settings.
      - **SNMPMinVersion**: Set to the default SNMPv3 to ignore SNMPv2c queries. Set to SNMPv2c to allow both SNMP v3 and SNMP v2c queries.
      - **SNMPv3User**: Enter the SNMPv3 username configured in SNMP monitoring solution. A value must be entered or SNMP v3 queries will return an error.
      - **SNMPv3Auth**: Enter the SNMPv3 authentication password configured in your SNMP monitoring solution. A value must be entered or SNMP v3 queries will return an error.
      - **SNMPv3Privacy**: Enter the SNMPv3 privacy (encryption) password configured in your SNMP monitoring solution. A value must be entered or SNMP v3 queries will return an error.
   b. For SNMP v2c, using firmware prior to D4.4.1, there are no configuration settings. The read-only community string is “edcpublic” and cannot be changed. If the printer is using D4.4.1 or later firmware, provide values that match the SNMP monitoring solution for the following settings.
      - **SNMPMinVersion**: Set to SNMPv2c.
      - **SNMPv2Community**: If all the Entrust printers are printers running D4.4.1 or later firmware, the SNMPv2Community can be set to something other than edcpublic.
6. Click **Save**.
7. Restart the printer.

Configuring the SNMP Client Application

Use required settings to retrieve SNMP data from an SNMP enabled printer the client application.

- **Device IP:** the IP address of the printer
- **Port:** 161
- **SNMP Version:** SNMP v2c
  - **Community String:** edcpublic or if all your printers are running D4.4.1 or newer firmware, this should be set to match the value for the SNMPv2Community printer setting.
- **SNMP Version:** SNMP v3
  - **SNMP User:** The user name of the authorized SNMP v3 client. Set this to match the value for the SNMPv3User printer setting.
  - **Authentication:** SHA-256 (The printer requires this value. It cannot be changed.)
  - **Authentication Password:** The SNMP v3 authentication password. Set this to match the value of the SNMPv3Auth printer setting.
  - **Encryption:** AES (The printer requires this value. It cannot be changed.)
  - **Encryption Key:** The SNMP v3 encryption password. Set this to match the value of the SNMPv3Privacy printer setting.

SNMP Data

The following SNMP data is provided by the printer.

SNMP OID	SNMP Name	Example Value	Comment
1.3.6.1.2.1.1.1.0	SysDescr	Entrust Datacard DS1 XA11355	Printer model and serial number
1.3.6.1.2.1.1.3.0	SysUpTime	585427	Time since last power up in hundreds of a second
1.3.6.1.2.1.1.4.0	SysContact	Entrust	Printer manufacturer
1.3.6.1.2.1.1.5.0	SysName	Entrust Printer	Device type
1.3.6.1.2.1.43.10.2.1.4.1.1	prtMarkerLifeCount	1143	Count of cards picked from all hoppers, including exception cards
1.3.6.1.2.1.25.3.5.1.1.1	hrPrinterStatus	3	• 1 (other) • 2 (unknown) • 3 (idle) • 4 (printing) • 5 (warmup)
1.3.6.1.2.1.25.3.5.1.2.1	hrPrinterDetectedErrorState		• 0x40 (no cards) • 0x20 (ribbon low) • 0x10 (ribbon out) • 0x08 (door open) • 0x04 (jammed) • 0x02 (offline) • 0x01 (service requested) If multiple errors, values get OR'ed together.

The following SNMP data is provided by the printer running firmware D4.3.1 or newer.

SNMP OID	SNMP Name	Example Value	Comment
1.3.6.1.2.1.1.2.0	SysObjectID	1.3.6.1.4.1.60797.2.3.9.1	60797 is the iana assigned Private Enterprise Number that identifies the device's manufacturer as Entrust Corporation. NOTE: Printer firmware must be at D4.3.1 or newer to see this value.

SNMP Troubleshooting

If SNMP is not functioning use the SNMP test tool to confirm that the printer has SNMP enabled, a tool such as Paessler SNMP Tester can be used to connect to the printer, and confirm SNMP is working. The example below shows how this tool is configured to test SNMP for the printer.

SNMP Tester Configured for SNMP v2c:

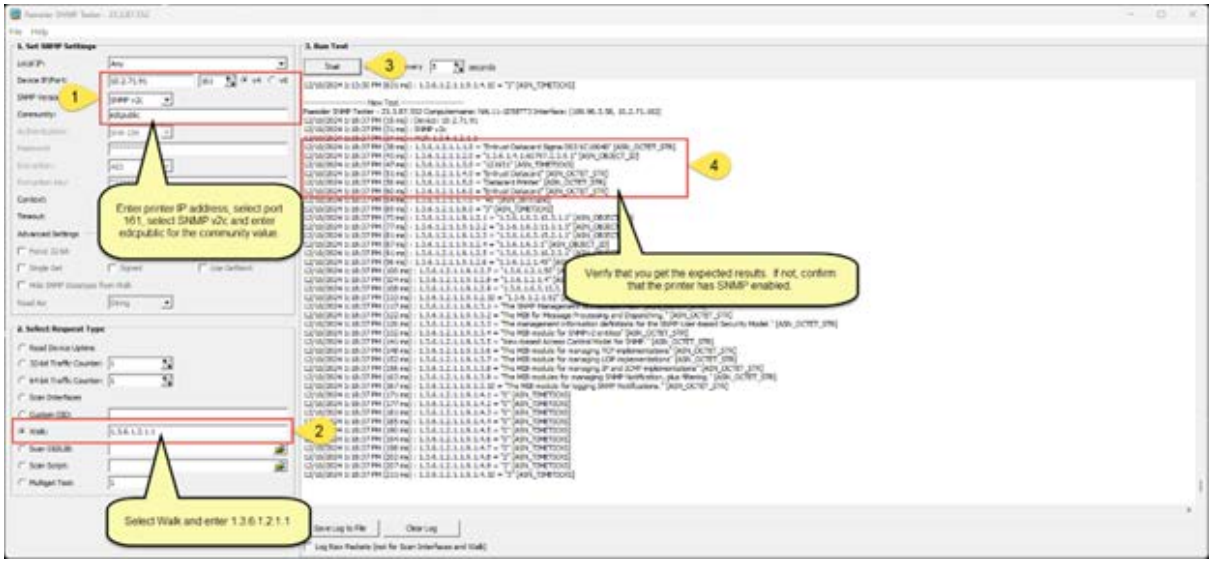

SNMP Tester Configured for SNMP 3:

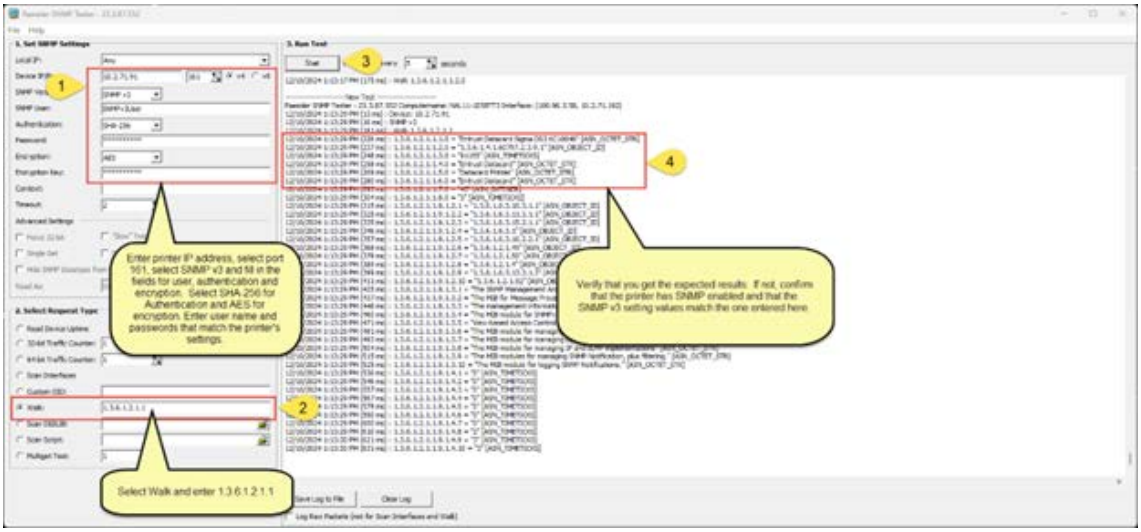

Connecting to an Enterprise Network

Connecting to an Authenticated Enterprise Network

IEEE 802.1x authenticated enterprise networks (Ethernet or Wi-Fi) restrict access to authorized devices and users. They require either a username/password or a certificate to access the network. Both of these methods are supported by DS series direct-to-card printers.

Preparing your Printer for Authenticated Network Access

A printer must be configured with the proper credentials to access your authenticated network. Contact your network administrator to gather the information you'll need to configure the printer. This will include some of the following:

- A TLS certificate
- A valid identify for one or both of the following printer settings:
  - **Configuration** > **Settings** > **Communication** > **IEEE8021XIdentity**
  - **Configuration** > **Settings** > **Communication** > **IEEE802XAnonymousIdentity**
- A valid password for the printer setting:
  - **Configuration** > **Settings** > **Communication** > **IEEE8021XPassword**
- If you are using Wi-Fi, a valid network SSID for the printer setting:
  - **Configuration** > **Settings** > **WifiNetworkStationSetup** > **WifiSSID**

Username/Password Authentication

Printer settings must be modified to configure a printer for authenticated network access. The settings are modified using the printer's Printer Dashboard administrators interface.

Username/Password Authentication for wired Ethernet

To provision a printer for authenticated network access, follow these steps:

1. Have a valid username and password for your network.
2. Connect to the printer's Printer Dashboard with an administrators account over a non-authenticated Ethernet or USB connection.
3. Access Printer Dashboard for the printer. Refer to "Set Up an Administrator in the Printer Dashboard" on page 21.
4. Log into Printer Dashboard with an administrators account, using the password set for that account.

5. Modify the following settings.
   a. Click **Configuration** > **Settings** > **Communication** > **IEEE8021XIdentity** and add a network username.
   b. Click **Configuration** > **Settings** > **Communication** > **IEEE8021XPassword** and add the network password.
   c. Click **Configuration** > **Settings** > **Communication** > **IEEE802XAnonymousIdentity** and add the anonymous network identity value.
6. Click **Save** to apply the settings changes.
7. Shut down the printer.
8. Connect the printer to the authenticated network.
9. Power on the printer.

Username/Password Authentication for Enterprise Wi-Fi

To provision a printer for authenticated Wi-Fi access, follow these steps:

1. Confirm that the printer has a Wi-Fi module installed.
2. Have a valid username and password for your network.
3. Connect to the printer's Printer Dashboard over a non-authenticated Ethernet or USB connection.
4. Access Printer Dashboard for the printer. Refer to "Set Up an Administrator in the Printer Dashboard" on page 21.
5. Log into Printer Dashboard with an administrators account, using the password set for that account.
6. Modify the following settings.
   a. Click **Configuration** > **Settings** > **Communication** > **IEEE8021XIdentity** and add a network username.
   b. Click **Configuration** > **Settings** > **Communication** > **IEEE8021XPassword** and add the network password.
   c. Click **Configuration** > **Settings** > **Communication** > **IEEE802XAnonymousIdentity** and add the anonymous network identity value.
   d. Click **Configuration** > **Settings** > **WifiModes** > **WifiMode** and set to **Station**.
   e. Click **Configuration** > **Settings** > **WifiNetworkStationSetup** > **WifiSSID** and add the Wi-Fi network SSID.
   f. Click **Configuration** > **Settings** > **WifiNetworkStationSetup** > **WifiSecurityMode** and set to **WPA2_Enterprise**.

7. Click **Save** to apply the settings changes.
8. Shut down the printer.
9. Disconnect the Ethernet or USB cable.

The printer only supports one network connection type at a time.

10. Power on the printer.

Certificate Authentication

A custom TLS certificate must be loaded on the printer to configure a printer for authenticated network access. The certificate is loaded using Printer Dashboard.

The certificate loaded for network authentication will also be used for TLS encryption of the card production interface.

Certificate Authentication for wired Ethernet

To provision a printer for authenticated network access, follow these steps:

1. Using a TLS certificate that provides access to the network, create a certificate with private key PEM file. For details on how to create a compatible certificate PEM file, refer to steps 1 and 2 of "Certificate with Private Key Workflow" on page 46.
2. Connect to the printer's Printer Dashboard over a non-authenticated Ethernet or USB connection.
3. Access Printer Dashboard for the printer. Refer to "Set Up an Administrator in the Printer Dashboard" on page 21.
4. Log into Printer Dashboard with an administrators account, using the password set for that account.
5. Click **Configuration** > **Certificate Management** page and load the certificate. Refer to "Certificate with Private Key Workflow" on page 46.
6. Modify the settings your network administrator identified as required.
   a. Click **Configuration** > **Settings** > **Communication** > **IEEE8021XIdentity** and add a network username.
   b. Click **Configuration** > **Settings** > **Communication** > **IEEE8021XPassword** and add the network password.
   c. Click **Configuration** > **Settings** > **Communication** > **IEEE802XAnonymousIdentity** and add the anonymous network identity value.
7. Shut down the printer.

8. Connect the printer to the authenticated Ethernet network.
9. Power on the printer.

Certificate Authentication for Enterprise Wi-Fi

To provision a printer for authenticated network access, follow these steps:

1. Confirm that the printer has a Wi-Fi module installed.
2. Using a TLS certificate that provides access to the network, create a certificate with the private key PEM file. For details on how to create a compatible certificate PEM file, refer to steps 1 and 2 of "Certificate with Private Key Workflow" on page 46.
3. Connect to the printer's Printer Dashboard over a non-authenticated Ethernet or USB connection.
4. Access Printer Dashboard for the printer. Refer to "Set Up an Administrator in the Printer Dashboard" on page 21.
5. Log into Printer Dashboard with an administrators account, using the password set for that account.
6. Click **Configuration** > **Certificate Management** page and load the certificate. Refer to "Certificate with Private Key Workflow" on page 46.
7. Restart the printer.
8. Log into Printer Dashboard using the administrators account.
9. Modify the following settings.
   a. Click **Configuration** > **Settings** > **Communication** > **IEEE8021XIdentity** and add a network username.
   b. Click **Configuration** > **Settings** > **Communication** > **IEEE8021XPassword** and add the network password.
   c. Click **Configuration** > **Settings** > **Communication** > **IEEE802XAnonymousIdentity** and add the anonymous network identity value.
   d. Click **Configuration** > **Settings** > **WifiModes** > **WifiMode** and set to **Station**.
   e. Click **Configuration** > **Settings** > **WifiNetworkStationSetup** > **WifiSSID** and add the Wi-Fi network SSID.
   f. Click **Configuration** > **Settings** > **WifiNetworkStationSetup** > **WifiSecurityMode** and set to **WPA2_Enterprise**.

10. Click **Save** to apply the settings changes.
11. Shut down the printer.
12. Disconnect the Ethernet or USB cable.

The printer only supports one network connection type at a time.

13. Power on the printer.

Adding a TLS Certificate

DS series direct-to-card printers running firmware version D4.3.2 or newer have the ability to add a TLS certificate onto the printer.

There are two supported workflows for loading a TLS certificate; the private key workflow which creates a TLS certificate for use by one or many printers, and the CSR[1] workflow which creates a printer-unique TLS certificate.

When a TLS certificate is loaded onto a printer, it is used in place of the Entrust-issued TLS certificate for the following functions:

Function	Certificate with Private Key Workflow	CSR Workflow
Enterprise network authentication of the printer	Yes	No
TLS encryption of card production communication	Yes	Yes
Printer Dashboard certificate	Yes	No*
IIDaaS cloud authentication of the printer†	No	No

* The existing Printer Dashboard certificate remains in place. If no custom TLS certificate was ever uploaded (using the Certificate with Private Key Workflow), a factory self-signed certificate is utilized.

† The Entrust factory loaded TLS certificate is used for this feature.

1 CSR = Certificate Signing Request

Certificate with Private Key Workflow

With the private key workflow, you create a TLS certificate that can be used by one or by many printers. Using this workflow, you create a certificate along with chain certificates and an encrypted password-protected private key in a format that can be pasted onto a Printer Dashboard web page.

Use the following process to load a TLS certificate using the private key.

1. Create the certificate.

   Use the process you have in place to generate a TLS certificate with a private key.

   When requesting the certificate, be sure to specify that the certificate have both **Client Authentication and Server Authentication** in the Enhanced Key Usage field.

2. Convert the certificate to PEM format.

   The TLS certificate, along with any intermediate and root certificates, and the private key must be converted to a PEM format and combined into a single file with the certificates ordered as:

   - Encrypted private key at the top of the file
   - Followed by the printer certificate
   - Followed by the intermediate certificate
   - Followed by the root certificate

   The printer will not accept certificates with bag attributes. If the certificate includes these, they must be removed before loading the certificate onto the printer.

   As an example, the following OpenSSL command will create a correctly formatted PEM file.

   ```
   openssl pkcs12 -in printercertandkey.pfx -out printercertandkey.pem
   ```

   A prompt will display for an import password (the password on the pfx), and then asked for a new PEM passphrase to use to encrypt the private key in the pem file. A password is required to be setup. When loading the certificate, this passphrase will be entered and used to decrypt the private key.

3. Load the TLS certificate.

   a. Access Printer Dashboard for the printer. Refer to "Set Up an Administrator in the Printer Dashboard" on page 21.

   b. Log into Printer Dashboard with an administrators account, using the password set for that account.

   c. Click **Configuration** > **Certificate Management** in Printer Dashboard.

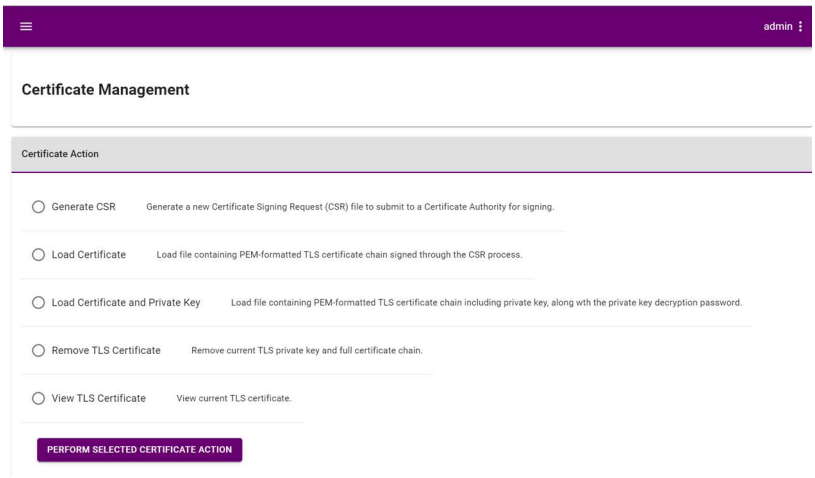

   d. Click **Load Certificate and Private Key**.

   e. Click **Select File** and browse to select the certificate.

   f. Enter the password to decrypt the private key, and click the **Perform Selected Certificate Action**.

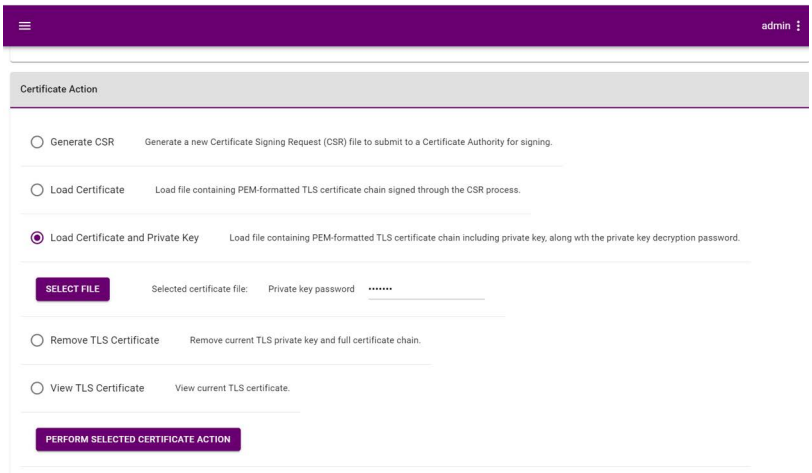

4. Restart the Printer to activate the certificate.
   a. Click **Troubleshooting** > **Restart Printer** in Printer Dashboard.
   b. Click **Restart** to restart the printer.
   c. Close Printer Dashboard.

   If the certificate does not need to be applied immediately, you can restart the printer using the front panel when convenient. The new certificate will not be used until the printer is restarted.

5. Confirm that the new TLS Certificate is Active
   a. Log into Printer Dashboard with an administrators account, using the password set for that account.
   b. Click **Configuration** > **Certificate Management** in Printer Dashboard.
   c. Select **View TLS Certificate** and click **Perform Selected Certificate Action**. The certificate details are displayed.

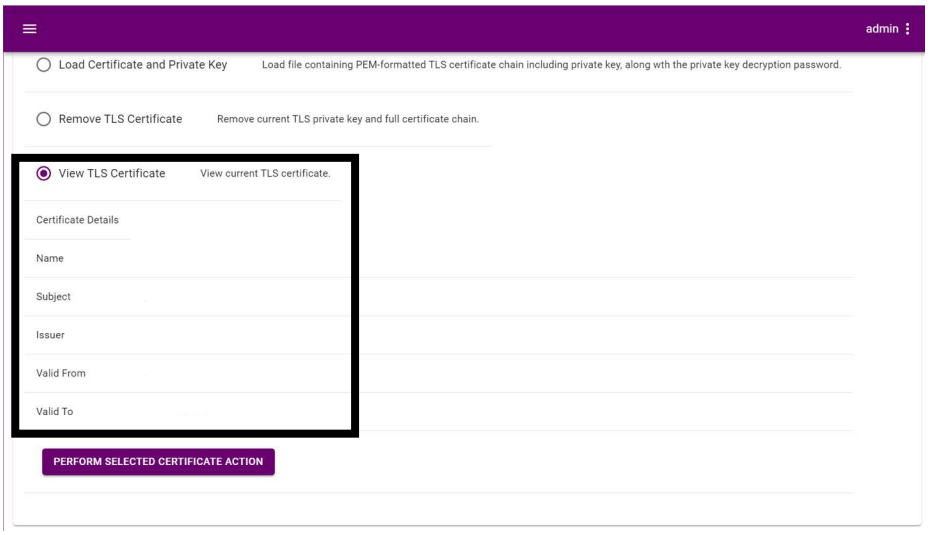

CSR Workflow

With the CSR workflow, the printer creates a CSR file that is signed by a trusted certificate authority to create a TLS certificate for that printer. Using this workflow, every printer receives a unique certificate.

Use the following process to load a printer TLS certificate using the CSR workflow.

1. Access Printer Dashboard for the printer. Refer to "Set Up an Administrator in the Printer Dashboard" on page 21.
2. Log into Printer Dashboard with an administrators account, using the password set for that account.
   a. Click **Configuration** > **Certificate Management** in Printer Dashboard.

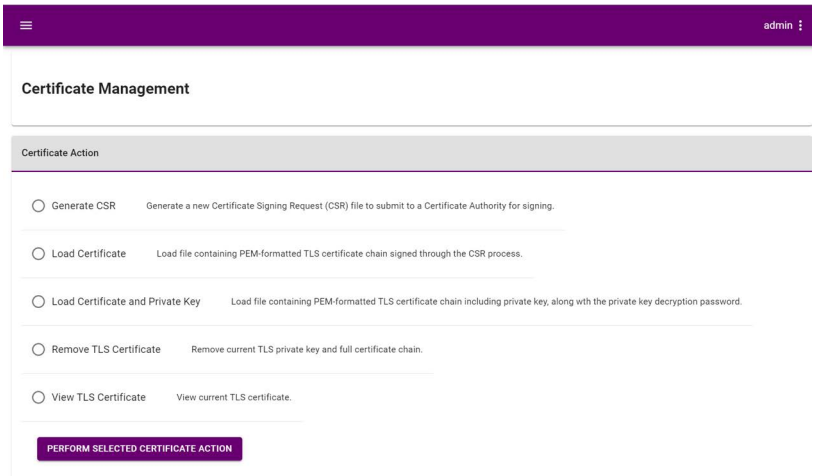

   b. Select the **Generate CSR** and click **Perform Selected Certificate Action**.

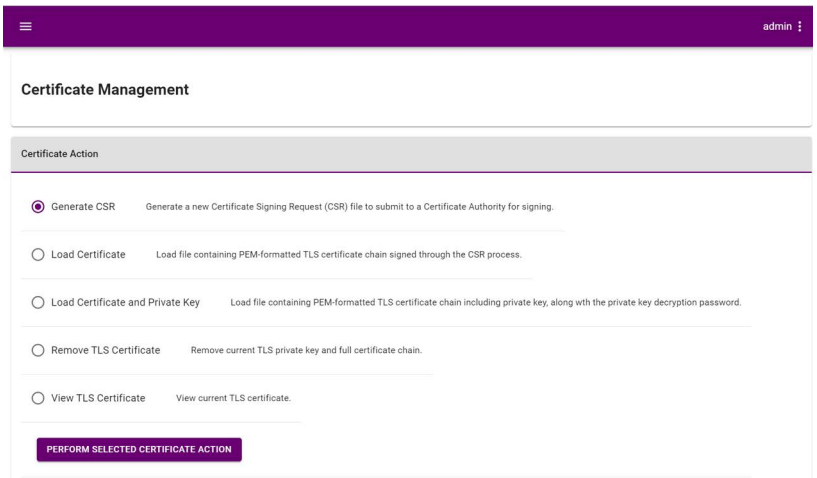

c. A generated CSR is placed into the Downloads folder of the computer. The file named using the serial number of the printer.

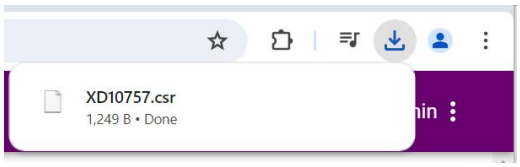

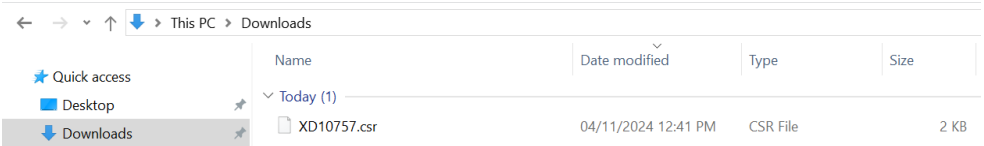

3. Use the CSR to request a TLS certificate.

   Use the process you have in place to generate a TLS certificate using the printer CSR.

   When requesting the certificate, be sure to specify that the certificate have both Client Authentication and Server Authentication in the Enhanced Key Usage field.

4. Convert the certificate to PEM format.

   The TLS certificate, along with any intermediate and root certificates provided must be converted to a PEM format and combined into a single file with the certificates ordered as:

   - Printer certificate at the top of the file
   - Followed by the intermediate certificate
   - Followed by the root certificate

   The printer will not accept certificates with bag attributes. If the certificate includes these, they must be removed before loading the certificate onto the printer.

The resulting text file contents will be loaded into printer using Printer Dashboard in Step 5.

As an example, if the TLS certificate request results in three certificates: PrinterCertificate.crt, Intermediate.crt, and Root.crt; the following OpenSSL commands will create a correctly formatted PEM file.

```
openssl x509 -in PrinterCertificate.crt -outform PEM -out
PrinterCertificate.pem
```

```
openssl x509 -in Intermediate.crt -outform PEM -out Intermediate.pem
```

```
openssl x509 -in Root.crt -outform PEM -out Root.pem
```

```
cat PrinterCertificate.pem Intermediate.pem Root.pem >  cert_chain.pem
```

5. Load the TLS certificate.

   a. Access Printer Dashboard for the printer. Refer to "Set Up an Administrator in the Printer Dashboard" on page 21.

   b. Log into Printer Dashboard with an administrators account, using the password set for that account.

   c. Click **Configuration** > **Certificate Management** in Printer Dashboard.

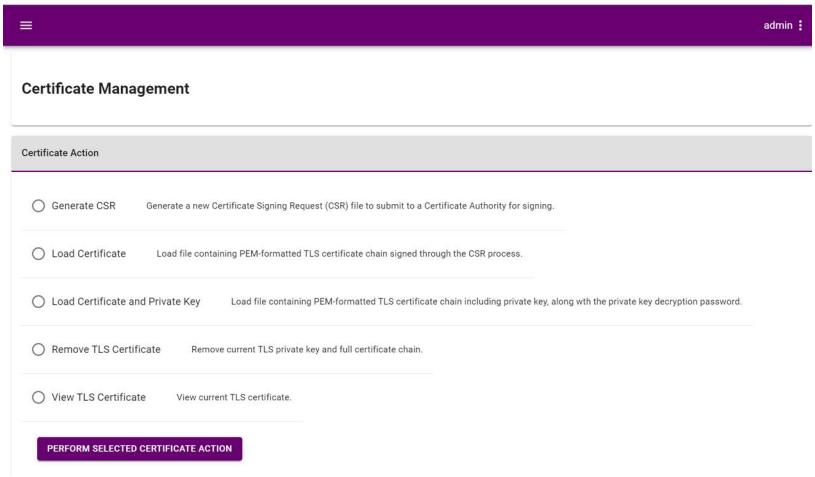

d. Click **Load Certificate**.

e. Click **Select File** and browse to select the certificate.

f. Click the **Perform Selected Certificate Action**.

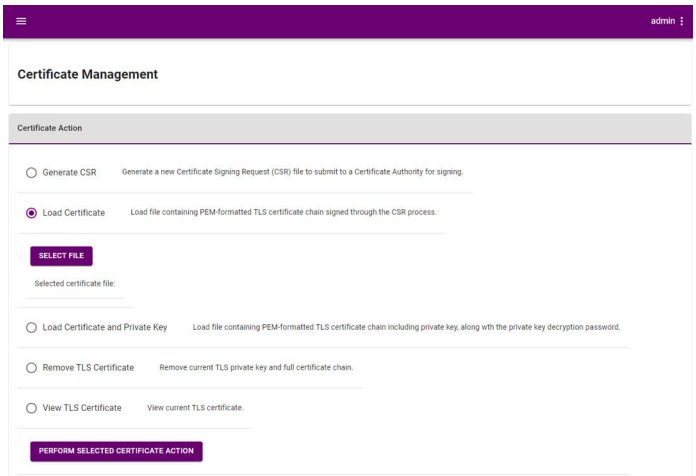

6. Restart the printer to activate the certificate.

   a. Click **Troubleshooting** > **Restart Printer** in Printer Dashboard.

   b. Click **Restart** to restart the printer.

   c. Close Printer Dashboard.

If the certificate does not need to be applied immediately, you can restart the printer using the front panel when it is convenient. The new certificate will not be used until the printer is restarted.

7. Confirm that the new TLS Certificate is Active
   a. Log into Printer Dashboard with an administrators account, using the password set for that account.
   b. Click **Configuration** > **Certificate Management** in Printer Dashboard.
   c. Select **View TLS Certificate** and click **Perform Selected Certificate Action**. The certificate details are displayed.

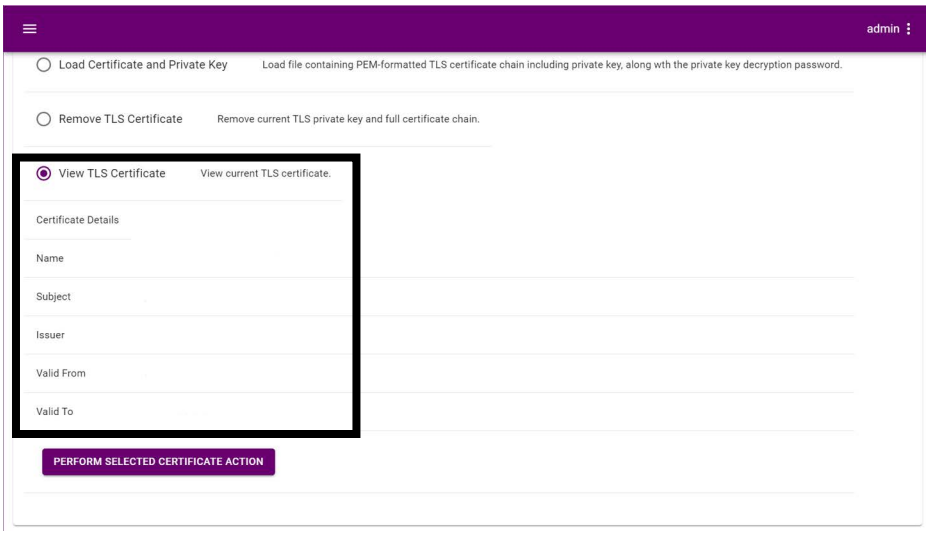

Run a SSA Test Card

Use the printer's front panel to run a SSA test card to configure the magnetic stripe start sentinel alignment (SSA). Make sure that a magnetic stripe card is loaded in the input hopper or hopper 1 of the multi-hopper (the lower left hand hopper) before you begin.

Adjust the start sentinel for magnetic stripe encoding after installing the multi-hopper to prevent magnetic stripe read/write errors. Perform the adjustment by running a magnetic stripe card using the SSA test.

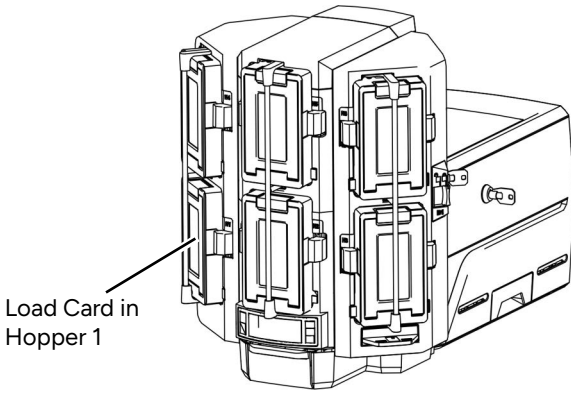

1. Begin with the printer in **Ready** status. Press the User button.
2. **Suspended** displays on line 1 of the LCD panel. Press Enter to enter the menu system.
3. **Maintenance** displays on line 3. Press the down arrow until **Configuration** displays on line 3.
4. Press Enter to enter the **Configuration** menu.
5. **Network IPv4** displays on line 3. Press the down arrow until **Magstripe** displays on line 3.
6. Press Enter to enter the **Magstripe** menu.
7. **Coercivity** displays on line 3. Press the down arrow until **SSA Test** displays on line 3.
8. Press Enter to enter the **SSA Test** menu.
9. **Start** displays on line 3. Press Enter to start the SSA test.
10. After the card runs, the printer returns to Ready.

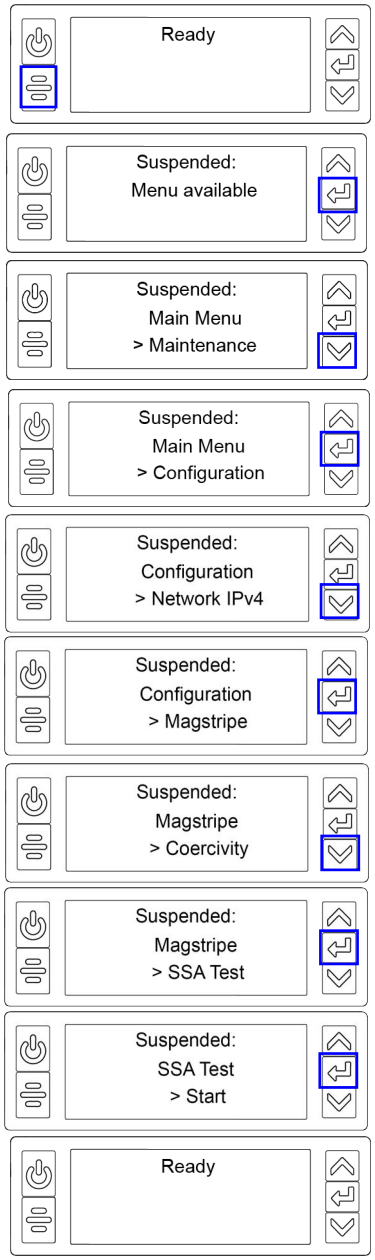

Configure Logical Hoppers

Logical hoppers can be configured in Printer Dashboard to create a hopper group containing cards from multiple input hoppers. When one hopper of a group becomes empty, the printer will pick cards from another hopper in the group.

1. At the Printer Dashboard home screen, click **Configuration** > **Logical Hoppers**.
2. Click and drag the hopper icons H1 through H6 into Logical Hoppers groups A through C.
3. Click Save to save logical hopper configuration.

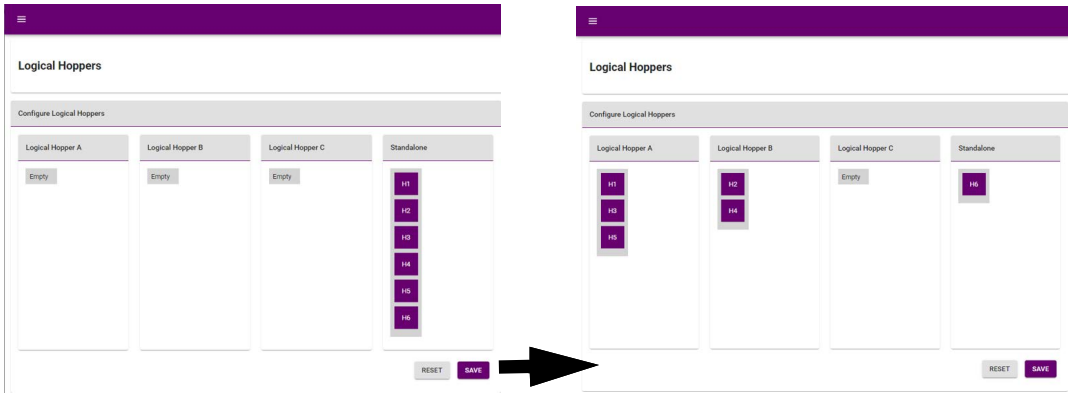

Chapter 2: Elements of Card Design

2

Card design is the name given to the combined features of the processed cards. An organization can have multiple card designs.

This chapter provides the following information about card design:

- Basic Card Design on page 59
- Printing Design on page 60
- Magnetic Stripe Design on page 73
- Smart Card Design on page 76
- Settings for Card Design in the Printer Dashboard on page 79

Basic Card Design

Card design includes:

- Color and monochrome printing.
- The various types of data, such as name, account number, and special features such as a magnetic stripe or smart card chip.
- The layout of the data.
- Optional ultraviolet (UV) printing for enhanced security.
- Optional luster (L) printing that provides color-shifting iridescent printing to enhance card appearance.
- Processes to enhance card appearance such as adding embossing or indent characters.

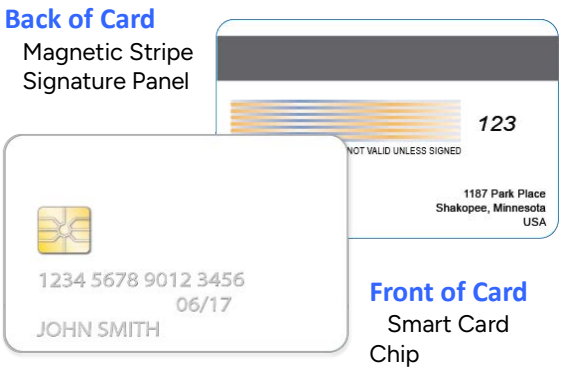

Printing Design

Printing design includes color and monochrome printing, bar code printing, non-printing areas, and card layout.

Color Printing

Color print ribbon is available in full-panel styles.

Full-Panel Ribbon

Full-panel color printing uses a print ribbon with three color panels: Y (yellow), M (magenta), and C (cyan). The ribbon also includes a K (black) panel and a T (topcoat) panel. The printer applies the YMC color panels to the card first, prints black components using the K panel, and then applies the T (topcoat) to protect the color image from damage.

Full-panel YMCKT Ribbon

Short-Panel Color Print Ribbon

Short-panel ymcKT Ribbon

Use short-panel print ribbon when only a portion of the card design calls for color. For example, a card design may have a color photo on the top or left of the card, and black text on the bottom of the card. The color area for short-panel ribbon is either 1.57 inches (40 mm) or 1.47 inches (37.5 mm), depending on the ribbon configuration. The ymc panels of short-panel ribbon are approximately half the length of a full card.

When you print with short-panel print ribbon, you define the location of the color area in the card design. Color printing begins when the software detects a color pixel and continues for the length of the ymc panels.

Split-Ribbon Color Printing

Split-ribbon color printing lets you use less ribbon to print cards in color. It is available only with the Card Printer Driver. Refer to the *XPS Card Printer Driver User's Guide* for information about how to specify split-ribbon color printing and the split ribbon options available.

Split-ribbon color printing uses a single ribbon panel set from a full-color ribbon to print both sides of a card, rather than two or three panel sets. The ribbon can be a full-panel color ribbon. The order in which the color, black, and topcoat sections of the panel set are used to print the card depends on the type of ribbon installed in the printer and the split-ribbon option selected on the printer's Printing Preferences window.

Most types of cards, including cards with magnetic stripes and smart cards, can be printed using split-ribbon printing. Options for color, and topcoat are available when you use split-ribbon printing.

Manage Color

Color management is the process of making color on the PC monitor and printed card appear as similar as possible. You specify the color management system using the Printer Dashboard Print menu. Refer to the Printer Dashboard Help for more information.

Print Text in Color

The printer can print text in any color. Small characters are likely to be more readable if they use a sans-serif font formatted as black and printed with the black (K) panel. Refer to "Print Text in Monochrome" on page 64. The printer supports 4-point or larger text.

Print Graphics in Color

The printer produces full-color images from most types of graphics. It can use BMP, JPEG, TIFF, and PNG file formats for photos and logos.

Vector graphics, such as WMF and SVG files, have components such as shapes with lines and fills. Components defined as black normally print with the K panel.

Because the printer uses the print ribbon panels in sequence (YMC first, then K), black images can print over color graphics. For the best appearance of color graphics, or to prevent backgrounds that are black from printing over colored images, use a color that appears black but is not, so that all parts of an image print with the YMC panels. For example, in the RGB color space, 0, 0, 0 is black (and prints with the K panel), but 0, 0, 5 is not black (and prints with the YMC panels).

Types of Color Images

Cards can include both color photos and color logos. The logo is usually the same on each card, and the photo is unique. Follow these guidelines to obtain the best results for printing both logos and photos.

1. Evaluate the color quality of the photos:
   a. Adjust the image capture system to get the best quality photos; work with distance, lighting, and camera settings to obtain consistent, high-quality photos.
   b. Evaluate the quality of printed photos after the image capture system is optimized.
2. Evaluate the other color areas of the card, such as text or logo:
   a. Check your card production application for settings that can help improve the printed color of text.
   b. Use an image editing application to adjust the color of a logo file for optimal printing.

Monochrome Printing

Monochrome printing prints cards using a single color. You can use a full-color ribbon or a monochrome ribbon that has only one color.

Monochrome Printing with Full-Color Ribbon

Full-color print ribbon includes a black panel. The black panel transfers to the card differently than the YMC panels. Text and bar codes usually are printed with the black panel. Full-color print ribbon also prints any monochrome or one-bit-per-pixel graphics using the K panel.

Full-panel YMCKT Ribbon

Monochrome Ribbon

Monochrome ribbon produces single-color cards. Monochrome ribbon can be any of the following:

- Alternating black and topcoat panels (KT or KTT ribbon)

  The printer applies black and one or two topcoat panels on the same side of the card.

KT Ribbon

KTT Ribbon

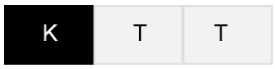

- Continuous black (K ribbon)
- A continuous color, for example, green or silver (also called a K ribbon). Refer to"Monochrome Print Ribbon Kits" on page 84 for a list of available colors.

Monochrome (K) Ribbon—

Monochrome Ribbon—

- Silver-Topcoat, Black (K)-Topcoat (ST-KT) and Gold-Topcoat, Black (K)-Topcoat (GT-KT), also referred to as
  MT-KT ribbons

  These ribbons print the front side of the card using the monochrome color panel and the back side using the black (K) panel. Topcoat is applied to both the front and back of the card. If the printer does not support the ribbon type, only the K panel is used.

ST-KT Ribbon

GT-KT Ribbon

Ribbon Saver

Continuous monochrome printing with certified ribbon uses the Ribbon Saver feature. With Ribbon Saver, the printer begins using ribbon at a location that corresponds to the start of printing. The printer continues to spool ribbon for the length of the image but no farther. The printer leaves a small margin between each card to avoid image overlap.

Print Text in Monochrome

Printing text using a K panel can make text look crisp, because it uses only one panel for printing. Fine text is more readable when printed with more power. You set the power for the K panel using the Printer Dashboard. Refer to the Printer Dashboard Help for more information.

The font used also affects legibility. The printer reliably prints 4-point Arial font. Bold, sans-serif fonts are more readable after printing than serif fonts, or fonts with thin strokes, as shown at right. In the example, fonts that print well are shown toward the top of the card.

The Card Printer Driver allows you to specify a custom print resolution of 300x600 or 300x1200, which also may increase the legibility of smaller font sizes. Refer to the *XPS Card Printer Driver User's Guide* for more information.

UV Curable Monochrome Ribbon

Printing using UV curable print ribbons requires a DS4 Instant Issuance Printer with a Durable Graphics Module (DGM).

UV curable monochrome ribbon can be any of the following:

- UV white monochrome or UV black monochrome
- UV metallic silver monochrome or UV metallic gold monochrome

Secure Scramble Monochrome Printing

The Secure Scramble feature is an option that is available on equipped DS4 printers. Printing with Secure Scramble allows users to specify the card fields that are to be securely printed, making defined personal data difficult to read from the used ribbon supply.

During card setup, the administrator selects what information is to be scrambled, for example: the user name, account number, expiration date, or CVV. Refer to the *Instant Financial Issuance Card Designer User Manual* for details using Secure Scramble in card production.

Secure Scramble affects the card throughput and print ribbon usage. The time to print depends on the amount of information that is being scrambled. For considerations of throughput, supply usage, and printer performance, it is recommended that the scramble design be less than 40 characters (while also excluding background images and non-personalized data). Secure Scramble is not designed for vertical printing applications.

Secure Scramble is supported by the following monochrome ribbons:

- Standard black or white monochrome
- UV white, UV black, UV metallic silver or UV metallic gold monochrome

Print Bar Codes

Bar code design follows a set of standards based on the type of bar code produced. Bar codes contain a series of black lines (bars) separated by white areas (spaces). Each character of encoded data is represented by a set of bars and spaces. A bar code standard specifies the number and width of bars and spaces needed to encode a character. The standard also specifies the minimum size of the white area, or quiet zone, that surrounds the bar code.

Refer to "Print Bar Codes With the Card Printer Driver" on page 68 for information about how to use the Card Printer Driver to improve the probability that a bar code prints using the K panel.

Bar Code Guidelines

Bar codes print more successfully when you observe the following guidelines. Follow the standards for the type of bar code you are printing.

Bar Code Placement

Maintain the required quiet zone around the actual bar code, as shown in the illustration.

Locate bar codes at least 0.25 inch (6.3 mm) from other printing and from the edge of the card.

For best results, orient the card so that the bars are parallel to the long edges of the card, as shown. This orientation most accurately prints readable bar codes.

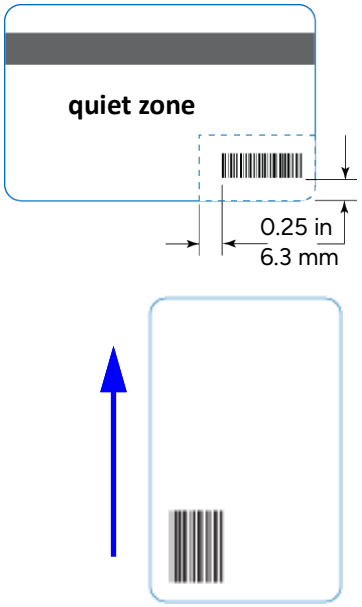

Bar Code Size

- A lower density bar code is easier to read, because the bars are wider and spaced farther apart.
- The width of the narrow elements in the bar code must be large enough to be read consistently. The capabilities of the bar code reader can influence this.
- The bar code must be tall enough to be read under normal conditions.

Bar Code Print Settings

- To achieve the best quality printing and improve the readability of the bar code, use the K (black) panel of color print ribbon to print the black bars. Bar codes printed with YMC panels are not as crisp and sharp as those printed with the K panel only. Refer to the *XPS Card Printer Driver User's Guide* or the documentation for your card personalization software for more information about how to print bar codes using the K panel.
- Infrared readers require that the K panel be used to print the bar code.

Test Bar Codes

Always test the readability of bar codes under production conditions. Factors to consider include:

- If you print cards one at a time, print the samples using that method. If you print cards in batch (many cards sent to the printer at the same time), use a production-sized batch and evaluate cards from the beginning, middle, and end of the batch.
- Use exactly the same card stock for testing that you use for production. The card stock can affect the readability of bar codes. Usually, a white surface that reflects light in many directions is needed. Test cards before purchasing production quantities.
- Include other card design components that you use in production, such as topcoat.
- Use the same bar code readers as users have, and test each card multiple times to simulate any wear the card might experience. Also test multiple cards.

Card Design Changes That Affect Bar Codes

If you make substantial changes to the way you produce cards, review your setup tasks to make sure that cards continue to have the quality you require.

Changes that can affect bar codes include:

- Purchasing a new brand of card stock, which can change the color of some images.
- Changing to, or from, preprinted cards, which can change the color of some images.

If you change the design of your cards, or if you start producing an additional card design, test each design as described in "Test Bar Codes" on page 67 to make sure that the bar code prints as expected.

Print Bar Codes With the Card Printer Driver

The Card Printer Driver includes a setting that allows the printer to use the black (K) panel to print the bars of a bar code embedded in a color image, making it more likely to be read by a scanner. Refer to the *XPS Card Printer Driver User's Guide* for complete information about how to specify the "Print black image pixels using monochrome" option.

Apply Topcoat

Full-color, UV, and luster printing fades if it lacks topcoat protection. Topcoat protects the printed image on the card. It is applied as an even, consistent film.

Make sure that all color printing is covered with topcoat (except for areas such as a magnetic stripe, smart card chip, or signature panel).

When a ribbon with a topcoat (T) panel is installed, the printer can apply topcoat to the card using the printhead. Most full-color ribbons include topcoat panels.

Topcoat must be requested by the application sending the card to the printer. Most card production software requests topcoat automatically.

Do not apply topcoat over the magnetic stripe, smart card chip, or signature panel of a card. To prevent topcoat application, you must specify a non-printing area.

Non-Printing Areas

The card design can have areas where printing is not allowed, such as a magnetic stripe, signature panel, or smart card chip. Card production software usually manages such non-printing areas automatically. You also can use the dimensions provided in the following sections for magnetic stripe and smart card non-printing areas to customize your print and topcoat areas.

- Blocking for non-printing areas typically extends 0.05 inch (1.27 mm) beyond the edges of a feature. The dimensions listed in the following sections include the extended blocking region.
- Print several cards using your card design and application to verify that printing and topcoat are applied as you intend.

The dimensions shown in the following sections are examples to help you determine the non-printing area. The actual dimensions can vary depending on the card stock you use.

Standard Magnetic Stripe Non-Printing Area

The magnetic stripe typically is located on the back of the card.

The following table shows the standard measurements for magnetic stripes. Use these values if you need to define a non-printing area. The non-print blocking area must extend outside the magnetic stripe by 0.05 in (1.27 mm), indicated by the dotted lines.

	A	B	C
3-track	5.0 mm	13.5 mm	86 mm
2-track	6 mm	9 mm	86 mm
Single-track (JIS)	7.5 mm	7.5 mm	86 mm

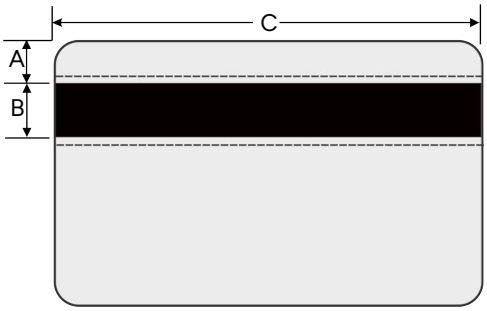

Standard Smart Card Non-Printing Area

The smart card area typically is located on the front of the card.

The following table shows the measurements for a typical smart card chip. The smart card chip can vary in size, shape, and location. Adjust these values based on the card stock you use. The non-print blocking area must extend outside the smart card chip by 0.05 in (1.27 mm), indicated by the dotted line.

A	B	C	D
19.5 mm	10 mm	13 mm	12 mm

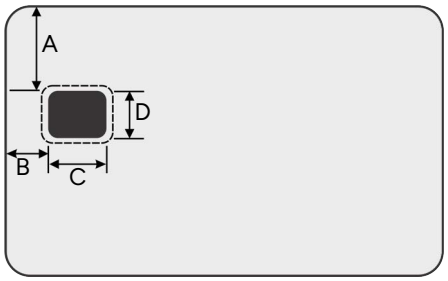

Custom Non-Printing Areas

Use ID software, a custom application, or escapes to define custom non-printing areas for one or more of the following:

- Blocking printing but not topcoat
- Non-standard areas, such as a preprinted logo or a signature panel
- More than one area on the same side of the card, such as a magnetic stripe and a signature panel

Card Layout

The arrangement or layout of components determines how well your card design works for users. Follow these guidelines to position card design components for best results.

Margins

Any unprinted area at the edge of the card or around the perimeter of a card feature is called the margin.

Margins at the Edge of a Card

The card printers print edge to edge, which means the printing is as close to the edge of the card as possible. When you set up your card design, you specify a margin of 0, or no margin. The printer leaves a small white margin around the edges of the card due to the printhead being lowered and raised as it prints. Keep this in mind if your card design includes a full-card image.

The following illustration shows the margin of white space at the outer edge of the card.

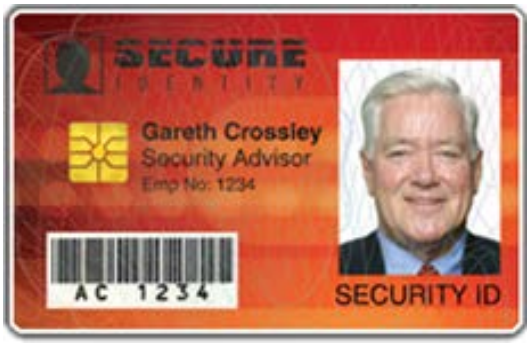

Margins for Card Features

Maintain a margin between printing and card features, such as a signature panel, magnetic stripe, or smart card chip. For best results, do not print closer than 0.05 inch (1.27 mm) from those features.

Backgrounds

Use the following suggestions to help you select a background for a professional-looking card. For best results, make sure that the background design does not emphasize the location of card features, such as embedded electronics.

- Consider using a white background for the card to achieve consistent professional results.
- Consider using smaller blocks of color, patterned areas, or gradients to highlight printed card features such as a name, photo, or logo.
- Avoid using a solid-color background over a large area of the card. It can show flaws on the card (such as an uneven surface) or the location of card features (such as a smart card chip).

Image Placement

Use the following suggestions to help you locate important images, such as a photo, logo, or bar code. When placing images, avoid uneven areas and areas of high wear, which can result in inconsistent print quality.

- Do not place an important image on the front of the card in the same area as a magnetic stripe or other machine-readable feature. Frequent use of a card in a reader can wear away the image on the opposite side of the card.
- Do not place an important image directly on the opposite side of a signature panel. This can cause residue from the signature panel to interfere with printing on an adjacent card. Place the image above, below, or to the side of the panel.
- Do not place an important image directly on the opposite side of a smart card chip. The card might not be as flat in that area, and printing voids may occur.

Magnetic Stripe Design

The printer's magnetic stripe module allows the printer to process magnetic stripe data. There are two magnetic stripe configuration options: ISO and JIS. Use the printer configuration label (described in the printer's *User's Guide*) to determine the type of module installed.

Magnetic Stripe Data Formats

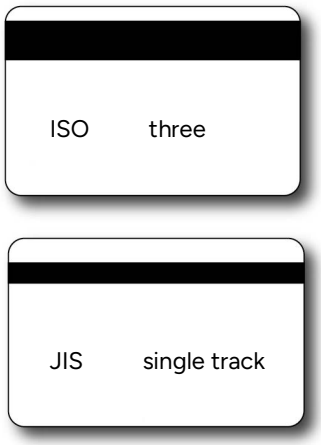

The module format (ISO or JIS) defines the type and format of the information to encode. The standard ISO format (also known as IAT) is a three-track option. The JIS format is a single-track option. Both formats include default data settings that determine how many characters can be encoded on each track, and which characters can be encoded.

Your cards can use the default format for each track, or can use a different combination of tracks and data formats.

Three-Track Option (ISO/IAT)

The default data formats for a three-track magnetic stripe option are:

- Track 1 — IATA
- Track 2 — ABA
- Track 3 — TTS

This combination is often abbreviated IAT. This format is also called ISO format.

IATA (International Air Transport Association)

The maximum number of characters for IATA format data is 76 characters. These characters can include spaces, uppercase alphabetic characters (A–Z), numeric characters (0–9), and the following special characters:

! # $ % ' ( ) * + , - . / ; : < @ > = ^] \ [" & _

ABA (American Bankers Association)

The maximum number of characters for ABA format is 37 characters. Numeric characters (0–9) and the following special characters are allowed:

: ; < = >

TTS (Thrift Third Standard)

The maximum number of characters for TTS format is 104 characters. Numeric characters (0–9) and the following special characters are allowed:

: ; < = >

Single-Track Option (JIS)

The default data format for a single-track magnetic stripe module is the JIS (Japanese Industrial Standard) Type II format.

The maximum number of characters for the JIS format is 69 characters. These characters can include spaces, numeric characters (0–9), uppercase alphabetic characters (A–Z), lowercase alphabetic characters (a–z), and the following special characters:

! " # $ % & ' ( ) * + , - . / : ; < = > ? @ [ ] ^ _ ~ { | } ~

A PC running a Japanese edition of a supported Windows operating system also supports Japanese-language special characters and 55 Katakana characters. They include the following:

- Special characters:

  。 「 」 、 ・ ー ゛ ゜

- 45 Katakana characters:

  ア イ ウ エ オ
  カ キ ク ケ コ
  サ シ ス セ ソ
  タ チ ツ テ ト
  ナ ニ ヌ ネ ノ
  ハ ヒ フ ヘ ホ
  マ ミ ム メ モ
  ヤ ユ ヨ
  ラ リ ル レ ロ
  ワ ン

- 10 Katakana characters:

  ヲ ァ ィ ゥ ェ ォ ャ ュ ョ ッ

The magnetic stripe data uses shift-JIS, which embeds a hidden "shift-in" and "shift-out" character each time the Japanese-language characters start and end. Each transition between normal characters and shifted characters is surrounded by these two control characters. They are encoded on the magnetic stripe. Thus, each hidden character reduces the number of characters you can encode by one character.

Magnetic Stripe Coercivity

The printer may require additional settings to match the coercivity of the card. When these values are set they remain the same for all cards processed using the same design. The defaults are set to standard ISO format and high coercivity. Refer to the Printer Dashboard Online Help for information about changing the coercivity.

The type of magnetic stripe cards you use must match the type of module (ISO or JIS) installed. Test your printer to make sure that it is encoding magnetic stripe information properly.

Smart Card Design

Smart card processing differs from other types of card personalization. The “smart card” step of personalization is controlled by an application that is separate from the rest of card personalization.

The smart card reader can be factory-installed, or installed later as a field upgrade by a service provider or value-added reseller. The printer configuration label (or a label attached at the time of the field upgrade) shows the type of smart card reader installed. You can request additional information about the smart card reader and the type of cards to use from your service provider or value-added reseller.

Smart Card Processing Requirements

The following items are required to personalize smart cards:

- A smart card reader in the printer
- A cable for the smart card port used (this cable is not needed for single-wire processing)
- A card production application that is designed to work with the printer and the smart card application
- Smart cards that work with the reader in the printer

Smart Card Codes on the Printer Label

The configuration label includes codes that identify the type and model of the smart card module installed in the printer. The following table lists the codes used on the configuration label.

Code on Label	Type of Smart Card Module
S1	Integrator Contactless
S14	OMNIKEY HID, Loosely Coupled, Contactless
S16	OMNIKEY HID, Single Wire, Contactless
S18	DUALI Next Gen, Single Wire, Contact/Contactless
S19	Identive Next Gen, Loosely Coupled, Contact/ Contactless

The S1 value on the configuration label indicates that the printer has the basic smart card components installed. Basic components include the mounting hardware only. An integrator must install a contactless reader.

If the Sx value is included in the configuration code, the printer has the basic components of an S1, plus the appropriate interface installed.

The smart card readers available vary by printer model. Contact your authorized dealer for more information.

Single-Wire Smart Card

Single-wire smart card processing allows a single USB or Ethernet connection with the printer to carry data for both smart card personalization and printing.

The single-wire smart card feature is available to an application through the Windows Driver Software Development Kit (SDK), or through your card personalization software.

The single-wire smart card programming interface is similar, but not identical, to the PC/SC standard. Applications using PC/SC to personalize smart cards require modification to use the single-wire smart card interface.

Required components for single-wire smart card are the same as for other smart card systems except as noted.

Embossing and Indenting Design

The ES1 Embosser is the component of a card production system that creates the raised lettering and numbering on the front of many financial or debit cards. Inside the embosser, you find the embossing wheel and topping and indent ribbon cartridges. The embossing wheel can be purchased with up to 75 punch and die or punch and anvil (indent) pairs. A second wheel option allows for up to 75 additional punch and die characters (indent is not available on the second wheel). Features of the embossing wheel that are determined at time of purchase include multiple font choices and a variety of special characters.

The embossing wheel with indent characters allows you to produce characters that are pressed into (indented) the front or back surface of the card. The most common use of indent characters is to create the Bank Identification Number (BIN) and Card Security Code (CSC), sometimes called the Card Verification Value (CVV), on financial credit and debit cards. Indent ribbon is available in black or white.

The embosser can emboss up to five lines of text or numbers. Topping foil is then heat sealed to the embossed characters. The foil is available in six colors.

Settings for Card Design in the Printer Dashboard

The Printer Dashboard contains card design settings that managers and service providers can use to set up card production. The card design settings include magnetic stripe setup and smart card testing. The Printer Dashboard also contains troubleshooting features such as a log file that can track all processes of a card job. Service providers can use the information in the log file to troubleshoot and relay information when troubleshooting card processing issues. Refer to the Printer Dashboard Help for more information.

Chapter 3: Supplies and Parts

3

This chapter describes the recommended supplies and replacement parts to use with your printer.

This chapter includes the following information:

- Print Ribbon on page 82
- Cards on page 87
- Cleaning Supplies on page 90
- Replacement Parts and Optional Equipment on page 91
- Cables and Power Supplies on page 92

Print Ribbon

Depending on the printer model, print ribbon is available in one of the following formats:

- A replaceable roll that you install on the print ribbon cartridge. The ribbon kit includes the print ribbon, a cleaning card, and a replaceable cleaning roller. For best results, run a cleaning card and replace the cleaning roller with each new print ribbon.
- A prefilled print ribbon cassette. The cassette is all-in-one, one-time-use print ribbon, cleaning roller, and ribbon cartridge. The kit includes the ribbon cassette and a cleaning card. Run the cleaning card before installing a new ribbon cassette.

Color Print Ribbon

Color print ribbon is available in either full-panel or short-panel options. Both full-panel and short-panel print ribbons use the following color panels: Y (yellow), M (magenta), C (cyan/blue), K (black), and T (topcoat). Ribbons with an ultraviolet fluorescent (F) panel provide an additional security feature. Ribbons with a luster (L) panel add color-shifting iridescent printing to enhance card appearance. Ribbons without a T (topcoat) panel are available for printers that have the optional laminator installed.

Full-Panel Color Print Ribbon

Use full-panel print ribbon when the card design calls for color printing on the entire card.

Full-panel color print ribbons with an ultraviolet (UV) fluorescent (YMCKF-KT) or luster (YMCKL-KT) panel, also are available.

Full-panel YMCKT Ribbon

YMCKF-KT Ribbon

YMCKL-KT Ribbon

Short-Panel Color Print Ribbon

Short-panel ymcKT Ribbon

Use short-panel print ribbon when only a portion of the card design calls for color. For example, a card design may have a color photo on the top or left of the card, and black text on the bottom of the card. The color area for short-panel ribbon is either 1.57 inches (40 mm) or 1.47 inches (37.5 mm), depending on the ribbon configuration. The ymc panels of short-panel ribbon are approximately half the length of a full card.

When you print with short-panel print ribbon, you define the location of the color area in the card design. Color printing begins when the software detects a color pixel and continues for the length of the ymc panels.

Color Print Ribbon Kits

The following color print ribbon kits are available. Not all ribbons are available in both roll and cassette formats, and the yield varies depending on the ribbon type. Contact your authorized dealer for complete information when ordering ribbons.

- YMCKT Color Ribbon
- YMCKT-KT Color Ribbon
- ymcKT (short-panel) Color Ribbon
- ymcKT-KT (short-panel) Color Ribbon
- YMCK Color Ribbon (used with laminating systems only)
- YMCK-K Color Ribbon (used with laminating systems only)
- YMCKF-KT Color Ribbon with UV (used with laminating systems)
- YMCKL-KT Color ribbon (used with laminating systems)

Monochrome Print Ribbon

A monochrome ribbon prints the entire card in one color.

Monochrome ribbon can be:

- Alternating black and topcoat panels (KT or KTT ribbon)
- Continuous black (K ribbon)
- A continuous color, such as red or silver
- Silver with Topcoat, Black with Topcoat (ST-KT)
- Gold with Topcoat, Black with Topcoat (GT-KT)

Monochrome Print Ribbon Kits

The following monochrome print ribbon kits are available:

- Alternating black and topcoat panels (KT ribbon)
- Black with two topcoat panels (KTT ribbon)

  The printer applies black and two topcoat panels on the same side of the card.

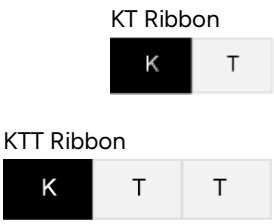

The KTT ribbon type is not supported in OpenCard-enabled systems. It uses only one T panel, instead of both.

- Continuous black (K ribbon), up to 1500 images per ribbon
- Continuous dark blue, up to 1500 images per ribbon
- Continuous white, up to 1500 images per ribbon
- Continuous red, up to 1500 images per ribbon
- Continuous green, up to 1500 images per ribbon
- Continuous silver, up to 1500 images per ribbon
- Continuous gold, up to 1500 images per ribbon
- Continuous silver metallic, up to 1500 images per ribbon
- Continuous gold metallic, up to 1500 images per ribbon
- Continuous scratch-off, up to 1500 images per ribbon

- Monochrome-Topcoat, Black-Topcoat
  - Silver-Topcoat, Black-Topcoat, up to 500 images per ribbon
  - Gold-Topcoat, Black-Topcoat, up to 500 images per ribbon

  These ribbons print the front side of the card using the monochrome color panel and the back side using the black (K) panel. Topcoat can be applied on one or both sides.

ST-KT Ribbon

GT-KT Ribbon

UV Curable Monochrome Print Ribbon Kits

Printing using UV curable print ribbons requires a DS4 Instant Issuance Printer with a Durable Graphics Module (DGM).

- Continuous black, up to 1500 images per ribbon
- Continuous white, up to 1500 images per ribbon
- Continuous silver metallic, up to 1500 images per ribbon
- Continuous gold metallic, up to 1500 images per ribbon

Ribbon Saver

A roll of certified monochrome ribbon enables the Ribbon Saver feature in the printer. Ribbon Saver can increase the number of cards printed with each roll of ribbon because only the printed portion of the ribbon is used. Excess ribbon is not advanced, reducing waste.

Print Ribbon Storage Guidelines

- Store print ribbon in the original package until you load it in the printer. Keep the original packaging closed until you are ready to use the ribbon.
- The print ribbon maintains its quality for about one year. For optimum card quality, purchase and store quantities of print ribbon that can be used within one year.
- The print ribbon and card stock might require secure storage and tracking. Follow your organization's policy for storing and tracking the supplies used to make cards.
- Store the print ribbon in a location away from direct sunlight, with a temperature between 32° and 77°F (0° and 25°C). A range of 40% to 60% non-condensing humidity is recommended.
- Install supply rolls at room temperature. If supplies are stored in an environment that is cooler than the printer environment, allow supplies to reach room temperature before you use them.
- If the printer will not be used for an extended period, remove supplies from the printer and store them with new supplies.

Cards

For best results, use high-quality cards that meet the following specifications and recommendations.

Card Size

Use ISO ID-1 cards (also called CR80 cards). The cards have the following dimensions:

Length	3.37 inches	85.60 mm
Width	2.125 inches	53.98 mm
Thickness	• Print only: 0.010 to 0.040 inches • Magnetic stripe cards: 0.020 to 0.030 inches	• 0.254 to 1.016 mm • 0.508 to 0.762 mm

Actual card thickness can vary by up to ten percent from the sizes listed. The card bow must be less than the thickness of the card.

Card Material

Use cards with a glossy PVC surface, either 100% PVC cards or composite cards with a PVC surface. Cards can have a magnetic stripe on one side of the card, and a smart card chip on the front side.

New Cards for Color Printing

The printer is designed to print on new card stock. If you print on cards twice, be careful to avoid getting dirt, fingerprints, or other contaminants on cards before the second printing. Previous printing can interfere with printing and result in cards that do not have the appearance you want. Printing on cards that previously have been issued might introduce substances that interfere with card printing or damage the printer. If a previously printed card has been printed with topcoat, the card cannot be printed a second time.

PETG Card Stock Support with UV Curable Print Ribbon

The printer firmware must be updated to D4.5.1 or above if printing on PETG cards using UV curable ribbon with the DS4 Instant Issuance Printer with Durable Graphics Module (DGM). Configure the CardStockType setting in Printer Dashboard for PETG card stock printing with UV curable print ribbon.

1. Access Printer Dashboard using an Administrators account.
2. Click **Configuration** > **Settings** > **Print**.
3. Click the options in the **CardStockType** setting and select the option for the card type used.
   - **PVC** - White or black PVC cards.
   - **PETG** - White or black PETG cards.
   - **rPETG** - Recycled white or black PETG cards.

Card Quality Guidelines

Cards must meet the following card quality guidelines for the printer to print high-quality graphics on them successfully.

Card Surface

The card must be smooth and even, and free of irregularities such as raised burrs or particles embedded in the surface. Surface irregularities can cause printing voids, especially when printing edge to edge.

Card Handling

These guidelines apply to unprinted cards.

- Debris or particles on blank card stock reduces card quality and damages the system.
- Grease or oils, such as oils from your fingers, reduces print quality. Keep cards completely clean. Do not touch the print surface of a card with your fingers or hands.
- Handle blank card stock by the edges only, or wear approved card inspection gloves.
- Always place cards on a clean surface when removing them from the printer (for example, during cleaning).
- Do not use a rubber band to bind blank cards together.
- If you drop a card on the floor, clean it using a lint-free cloth before using it in the system.
- Never use solvents to clean the card.

Card Storage

These guidelines apply to both printed and unprinted cards.

- Stack cards so that they do not shift and rub against each other.
- When you store cards, make sure that no two cards contain images or blocks of color that come in contact with each other.
- Make sure that the magnetic stripe on one card does not come in contact with the magnetic stripe on another card.
- Make sure that cards with magnetic stripes are stored away from magnets and other magnetic objects.
- Store cards in a cool, dry, and dark place. Excessive light can cause yellowing of cards on exposed edges.
- Store cards in their original packaging.
- Cards must be at room temperature when they are used. If cards are stored in a cooler environment than the printer, allow them to reach room temperature before you use them.

Cleaning Supplies

All print ribbon kits include a cleaning card. Ribbon kits with a replaceable print ribbon also include a replaceable cleaning roller. For best results, keep additional cleaning supplies on hand.

The following additional cleaning supplies are available:

Supply	Description
Isopropanol cleaning cards	Pack of 10 double-sided, isopropanol-coated cleaning cards used to clean the printer card track and transport rollers.
Cleaning rollers	Pack of 5 replaceable, adhesive-coated cleaning rollers, used with the print ribbon cartridge.
Cleaning swabs	Pack of 5 isopropanol-saturated cleaning swabs to clean debris and dust from the printhead and from hard-to-reach internal areas of the printer.

Replacement Parts and Optional Equipment

The following items are available for the printer.

Print Ribbon Cartridge

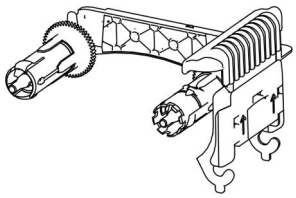

The ribbon cartridge holds the print ribbon and the replaceable cleaning roller in the printer.

125-Card Input Hopper

You can purchase additional 125-card input hoppers. The input hopper is removable allowing you to load different cards types in each hopper.

Cable Lock

The printer can be used with a cable lock. Obtain the lock from your dealer, because it includes an added security plate that is inserted into the printer.

Cables and Power Supplies

The printer uses the following data cables and power supplies.

Data Cables

The data cable connects the printer to the network or directly to a PC. You can use one of the following data cables:

- USB
- Network (Ethernet)

Use only one type of data cable with a printer. If you need to connect more than one PC to a printer, use a network connection.

USB Cable

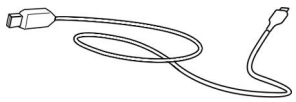

Use a USB-C data cable, 6 feet (2 meters) long, to connect the printer to the PC. Be sure to use a cable rated for USB 3.0 data transmission.

Network Cable

Use a standard Ethernet network cable, also called a Category 5 or Cat 5 cable, to connect the printer to a network port.

USB Smart Card Cable

Printers that have a loosely coupled smart card reader use a USB data cable, up to a maximum of 6 feet (2 meters) long, to connect the smart card reader in the printer to the PC.

Printer Power Supply

The printer power supply is rated as follows:

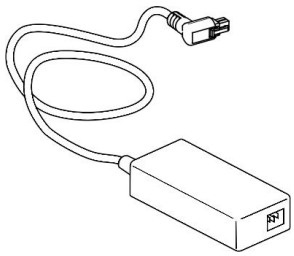

- Input: 110–V240V, 50–V60Hz, 1.5A
- Output: 24V, 3.0A, 72W

It is self-adjusting within the rated input voltage.

Power Cords

The power cords connect the power supplies for the printer, and any attached component, to the facility power. Be sure to use power cords that ground to the facility power source.

The following country-specific power cords are available:

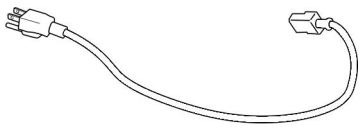

- USA Power cord
- Australia power cord
- Brazil power cord
- China power cord
- Denmark power cord
- European power cord
- India power cord
- Israel power cord
- Italy power cord
- Japan power cord
- South Africa power cord
- Swiss power cord
- United Kingdom power cord