User's Guide

Entrust® Datacard® (formerly Sigma)
DS4 Instant Issuance Printer and
DS4-ES1 Instant Issuance Printer
with Embossing Module

June 2026

528061-001, Rev L

Notice

Please do not attempt to operate or repair this equipment without adequate training. Any use, operation or repair you perform that is not in accordance with the information contained in this documentation is at your own risk.

Trademark Acknowledgments

Entrust and the hexagon design are trademarks, registered trademarks and/or service marks of the Entrust Corporation in the United States and other countries.

Datacard is a registered trademark and service mark of Entrust Corporation in the United States and other countries.

MasterCard is a registered trademark of MasterCard International Incorporated.

Visa is a registered trademark of Visa International Service Association.

All other product names are the property of their respective owners.

Proprietary Notice

The design and information contained in these materials are protected by US and international copyright laws.

All drawings and information herein are the property of Entrust Corporation. All unauthorized use and reproduction is prohibited.

Entrust Corporation
1187 Park Place
Minneapolis, MN 55379
Phone: 952-933-1223
Fax: 952-933-7971
www.entrust.com

© 2020-2026 Entrust Corporation. All rights reserved.

Safety

The following basic safety tips are given to ensure safe installation, operation and maintenance of Entrust equipment.

- Connect equipment to a grounded power source. Do not defeat or bypass the ground lead.
- Place the equipment on a stable surface (table) and ensure floors in the work area are dry and non-slip.
- Know the location of equipment branch circuit interrupters or circuit breakers and how to turn them on and off in case of emergency.
- Know the location of fire extinguishers and how to use them. ABC type extinguishers may be used on electrical fires.
- Know local procedures for first aid and emergency assistance at the customer facility.
- Use adequate lighting at the equipment location.
- Maintain the recommended temperature and humidity range in the equipment area.

Safe Human Interface

- Use proper lifting techniques when moving or installing the equipment.
- Use standard electrostatic discharge (ESD) precautions when working on or near electrical circuits.
- Do not defeat or disconnect safety interlocks on covers.

Warning: To avoid a possible electric shock, always unplug the system before servicing.

Liability

The WARNING and CAUTION labels have been placed on the equipment for your safety. Please do not attempt to operate or repair this equipment without adequate training. Any use, operation, or repair in contravention of this document is at your own risk.

California Prop

Warning: This product contains chemicals, including lead, known to the State of California to cause cancer, and birth defects or other reproductive harm. *Wash hands after handling.*

For more information on this warning, refer to:

https://www.entrust.com/legal-compliance/environmental-product-certifications

Revision Log

Revision	Date	Description of Changes
A	November 2020	First release of this document
B	March 2021	Updated document with new printer features.
C	September 2022	Updated document with new printer features.
D	February 2023	Updated document with Secure Scramble option.
E	September 2023	Updated document for 3 input/3 output multi-hopper.
F	December 2023	Updated information on 3 input/3 output multi-hopper and cleaning procedures.
G	April 2024	Updated document with new condition codes.
H	July 2024	Removed 3 input/3 output multi-hopper information from the document.
K	March 2026	Added condition 350 and note to remove the ribbon cartridge for enhanced cleaning.
L	June 2026	Branding of printer changed to Datacard.

Contents

Chapter 1: Introduction 1
- **About this Manual** 1
- **Intended Audience** 1
- **Technical Support** 1

Chapter 2: About the Printer 3
- **About the Datacard Card Printers** 3
- **Printer Components** 4
  - Printer Left Side 4
  - Printer Front and Right Side 5
    - Single-Hopper Printer 5
    - The Printer Cover 6
  - Printer Back 7
  - Multi-Hopper Printer 8
    - Multi-Hopper Input Cartridge 9
  - Manual Feed Input Hopper 11
  - Inside the Printer 12
  - Print Ribbons 13
    - Ribbon Cartridge 13
    - Prefilled Print Ribbon Cassette 14
- **Optional Components** 15
  - ES1 Emboss Module 15
  - Rear Indent Module (RIM) 15
  - Durable Graphics Module (DGM) 16
- **Printer Configuration Label** 17
  - Multi-Hopper Configuration Label 19

Chapter 3: Using the Printer 21
- **Printer Overview** 21
  - Equipment 21
  - Tasks and Users 22
- **Secure Encryption** 22
- **Printer Controls** 23
  - Power Button 23
  - User Button 23
  - Down Arrow, Up Arrow, and Enter Key 23
  - LCD Panel Icons 24
  - LCD Panel Menus 26
- **Retrieve the Printer's Network IP Address** 28
  - Retrieve an IPv4 Address 28
  - Retrieve an IPv6 Address 30
- **Print a Test Card** 33

Load and Replace Supplies 34
Load Cards 34
Single-Hopper Printer 34
Use the Exception Slot 35
Manual Feed Input Hopper Printer 36
Multi-Hopper Printer 36
Use the Multi-Hopper Exception Slide 38
Replace the Print Ribbon 39
Load the Print Ribbon Cartridge 39
Install the Prefilled Print Ribbon Cassette 40
Use the Printer Dashboard 42

Chapter 4: Print Cards 45
Before You Begin 45
Print from Instant Financial Issuance Software 46

Chapter 5: System Maintenance 47
Maintain the Printer 47
Clean the Printer 48
Single-Hopper Printer 49
Multi-Hopper Printer 50
Run the Cleaning Card 51
Prepare the Printer for Use 53
Clean the Printhead 54
Empty the Reject Tray 56

Chapter 6: Troubleshooting 57
Locate a Problem Within the Card Production System 58
Locate a Problem with Basic Printer Functions 59
Installation Problems 60
Network Installation Troubleshooting 60
Card Appearance 61
Something did not print 62
The color printing has flaws 62
The printing is too light 64
The printing is too dark 65
The monochrome printing has flaws 65
Magnetic Stripe Problems 66
Use Advanced Troubleshooting Tools 67
Clear a Card Jam 68
Repair a Broken Ribbon 70
Messages and Conditions 70
Messages on the Printer LCD 71
Messages in the Printer Dashboard 71
Other Messages 71

Respond to Messages . . . 71
Printer Messages . . . 72
Close and lock doors . . . 72
100: Request not supported . . . 72
101: Job could not complete . . . 72
102: Card not in position . . . 72
103: Printer problem . . . 73
104: Critical problem . . . 73
105: Magstripe data error . . . 73
106: Magstripe data not found . . . 74
107: Magstripe read data error . . . 74
108: Magstripe read no data . . . 75
109: Print ribbon problem . . . 75
110: Print ribbon out or missing . . . 76
111: Card not picked . . . 76
112: Card hopper empty . . . 77
113: Close cover to continue . . . 77
114: Cover opened during job . . . 77
116: Magstripe not available . . . 78
117: Reader not available . . . 78
118: Print ribbon type problem . . . 79
119: Print ribbon not supported . . . 79
120: User paused the printer . . . 79
121: Print ribbon not identified . . . 80
122: Magstripe format problem . . . 80
123: Insert new card side 1 up . . . 80
124: Insert same card side 2 up . . . 80
149: Option not installed . . . 81
150: Print while unlocked . . . 81
151: Failed to lock . . . 81
152: Insert new card side 2 up . . . 81
153: Insert same card side 2 up . . . 82
170: Insert new card side 1 up . . . 82
171: Insert same card side 1 up . . . 82
172: Insert cleaning card . . . 82
173: Improper shutdown . . . 82
245: Configuration error . . . 82
275: Multi-hopper error . . . 82
276: Multi-hopper card jam . . . 83
277: Multi-hopper pick error . . . 83
294: Cleaning required . . . 83
295: Settings error . . . 83
297: Option tag error . . . 83
298: Option tag success . . . 83
299: Image error . . . 84

300: CardNotPrinterDispensed 84
310: KioskCardLost 84
323: Insert cleaning card. 84
329: Multi-hopper eject error 84
346: IIDaaS ribbon in IFI printer 84
347: Certificate error 84
348: Generate CSR error 84
349: Printhead disconnected 84
350: Remove print ribbon. 85

Chapter 1: Introduction

1

About this Manual

This manual provides user information for the Entrust® Datacard® (formerly Sigma) DS4 and DS4-ES1 Instant Issuance Printers. The manual includes:

- An overview of printer components and options, and a description of the system label.
- How to use the printer, including how to power the printer on and off, how to use the front panel and LCD menus, card processing basics, how to print a test card, and how to load and replace supplies.
- How to perform routine maintenance and troubleshooting tasks.

An additional *Installation and Administrator's Guide* is available for use by administrators or other professionals responsible for printing cards.

Intended Audience

The manual is intended for the printer operator who prints cards, loads and replaces supplies, maintains the printer, and performs troubleshooting.

Technical Support

Use the following to contact Entrust Technical Phone Support.

Americas	+1 800.328.3996 or +1 952.988.2316
EMEA (Europe, Middle East, Africa)	+44 1489555627
Asia Pacific	+852 2821 0126

Chapter 2: About the Printer

2

About the Datacard Card Printers

The card printer applies images, text, and encoded data to plastic cards. It can print full-color and monochrome images, depending on the type of print ribbon installed.

The printer can be ordered with a variety of options, depending on your site requirements and your printer model. Options include a magnetic stripe encoder, contact or contactless smart card reader, locks, and duplex printing.

A 125-card input and 25-card output hopper are standard. A manual input hopper is available on some models. An optional multi-hopper with six input hoppers, each with a 125-card capacity also is available.

In addition, optional upgrade kits allow you to install a Wi-Fi Module and various rear modules to the printer. An optional embosser is available on the DS4 Instant Financial Issuance Printer.

The configuration label on the printer shows the options installed. Refer to "Printer Configuration Label" on page 17 for more information about identifying the factory-installed options on your card printer.

Printer Components

Use the following sections to become familiar with the printer.

Printer Left Side

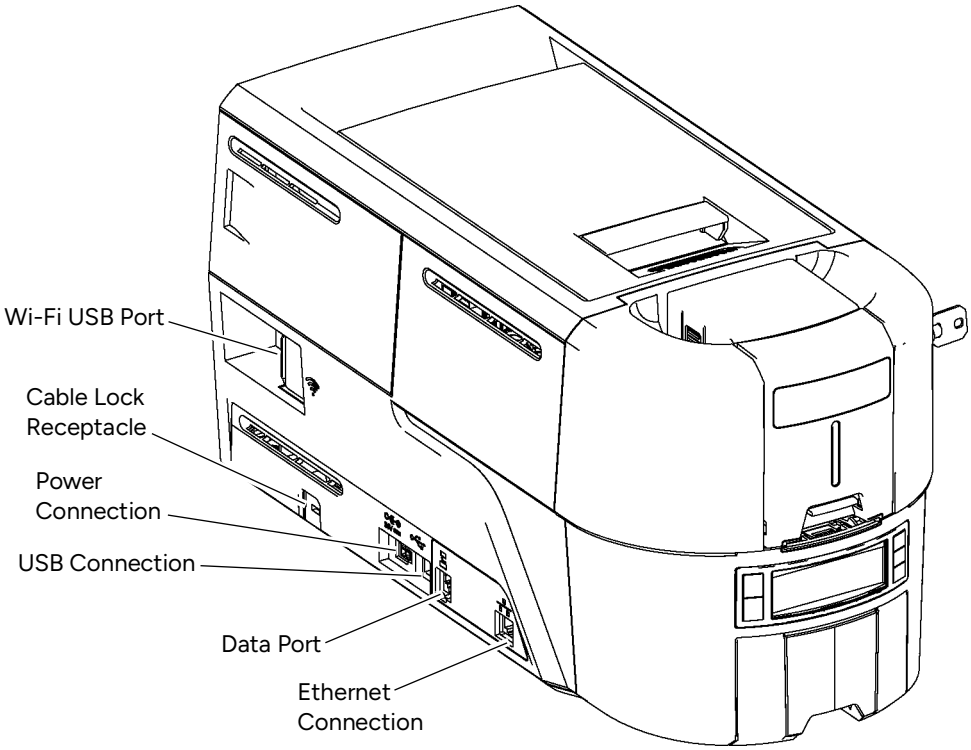

Wi-Fi USB Port	The Wi-Fi port allows you to insert the optional Wi-Fi Module in the printer.
Cable Lock Receptacle	The receptacle allows you to insert the security plate before attaching the optional cable lock.
Power Connection	The power connection provides a plug-in connector for the printer power supply.
USB-C Connection	The USB-C connection allows you to connect the printer directly to a computer.
Data Port	The data port allows you to connect the printer to another component, such as a embosser.
Ethernet Connection	The network connection allows you to connect the printer to an Ethernet network.

Printer Front and Right Side

Single-Hopper Printer

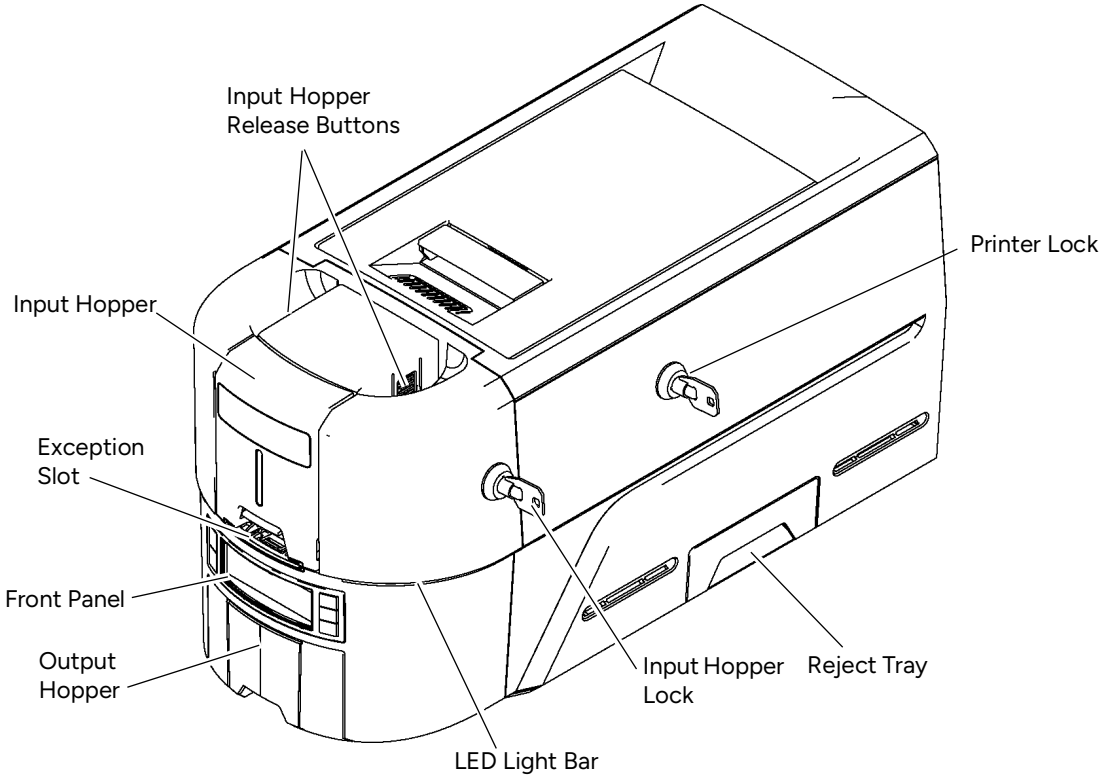

Input Hopper	The input hopper holds cards for printing. The hopper holds up to 125 cards (0.030 in. or 0.762 mm thickness). The input hopper can be removed from the printer for secure storage.
Input Hopper Release Buttons	The release buttons allow you to remove the input hopper from the printer. Push in the buttons, squeeze the cartridge, and pull it out from the printer.
Exception Slot	Use the exception slot to insert a single card, such as a different card type than those loaded in the input hopper.
Front Panel	Use the front panel to work with the printer. The LCD panel displays printer messages and status information. The buttons allow you to power the printer on and off, and navigate the printer menu system.
Output Hopper	The output hopper holds up to 25 completed cards.

LED Light Bar	The LED light bar blinks to indicate a printer error status. It is a solid color when the printer is in **Ready** status.
Input Hopper Lock	The input hopper lock unlocks the input hopper.
Reject Tray	Unfinished cards or cards not processed properly are placed in the reject tray. An administrator can change the reject card location to the output hopper using the Printer Dashboard. Refer to the Printer Dashboard Help for more information.
Printer Lock	The printer lock unlocks the printer cover and reject tray.

The Printer Cover

Use the cover latch handle to open the printer cover.

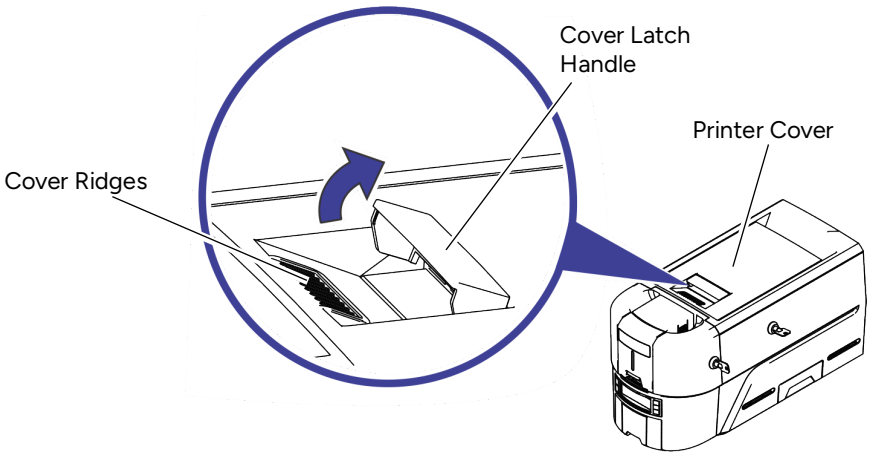

Printer Cover	Open the printer cover to access the printhead and ribbon.
Cover Latch Handle	Lift the latch handle to open the printer cover.
Cover Ridges	Press down on the ridges when closing the cover to make sure that it latches completely on both sides.

Printer Back

Some printer models can have an additional module mounted to the back of the printer.

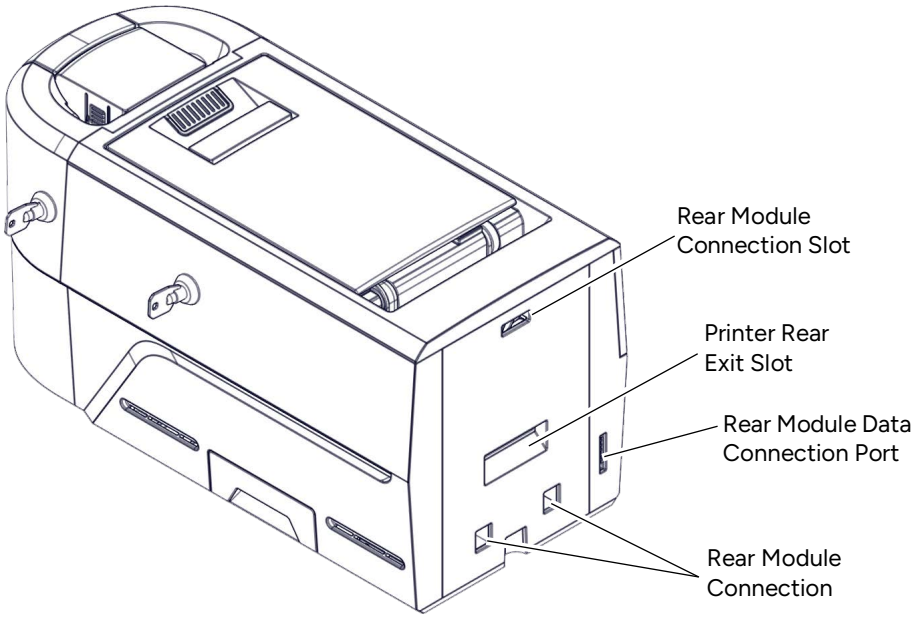

Printer Rear Exit Slot	The rear exit slot allows the card to move into the rear module from the printer.
Rear Module Data Connection Port	The electrical connection for the rear module to connect to the printer.
Rear Module Connection Slots	The connection slots allow the rear module component to connect to the printer. Refer to the modules *Upgrade Installation Instructions* for complete information about how to install the rear module.

Multi-Hopper Printer

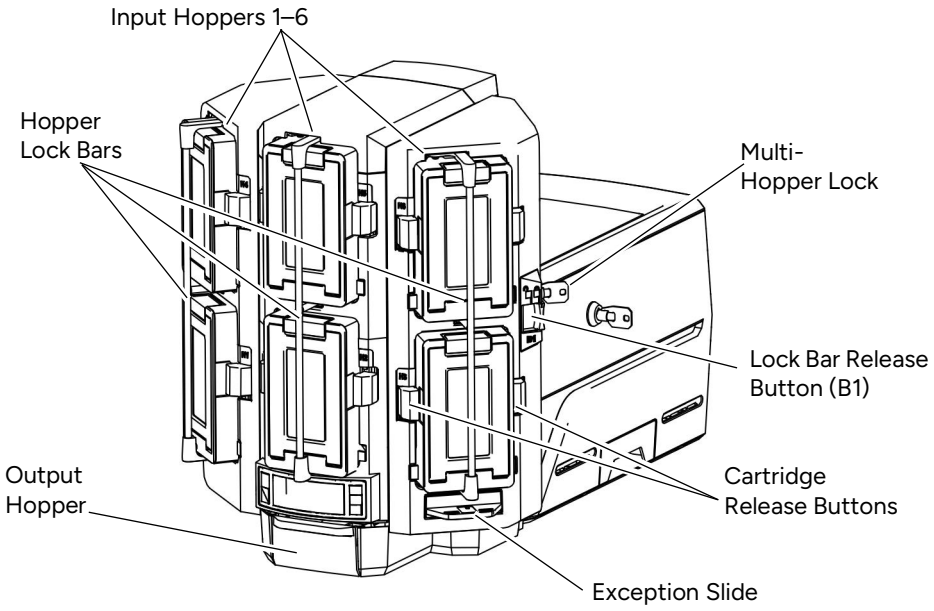

Input Hoppers 1–6 Each hopper cartridge in the multi-hopper holds up to 125 cards (0.030 in. or 0.762 mm thickness).

The hopper cartridges can be removed from the printer for secure storage.

Hopper Lock Bars The lock bars rotate to the left to allow access to the hopper cartridge doors, so that you can load cards into the cartridges.

Output Hopper The output hopper holds up to 25 completed cards.

Multi-Hopper Lock The multi-hopper lock secures all six input hoppers. The lock can be opened using a key or a command from your card personalization software.

Sending a command to open the lock opens all locks on the printer and on any attached component.

Lock Bar Release Button (B1) The release button (B1) releases the lock bars in front of the input hopper cartridges. Slide the button to the left to release the bars. You must have unlocked the multi-hopper using the key or a software command before the lock bars can be released.

Cartridge Release Buttons The cartridge release buttons allow you to remove the cartridge from the multi-hopper unit. Push in the buttons, squeeze the cartridge, and pull it out from the multi-hopper. You do not need to remove a hopper cartridge to load cards.

Exception Slide The exception slide allows you to insert a single card into the printer without unlocking the multi-hopper or opening a hopper cartridge. Refer to "Use the Multi-Hopper Exception Slide" on page 38.

Multi-Hopper Input Cartridge

The multi-hopper input cartridges can be pulled out from the multi-hopper unit. You can remove the cartridges with the cards inside and store them securely, if necessary.

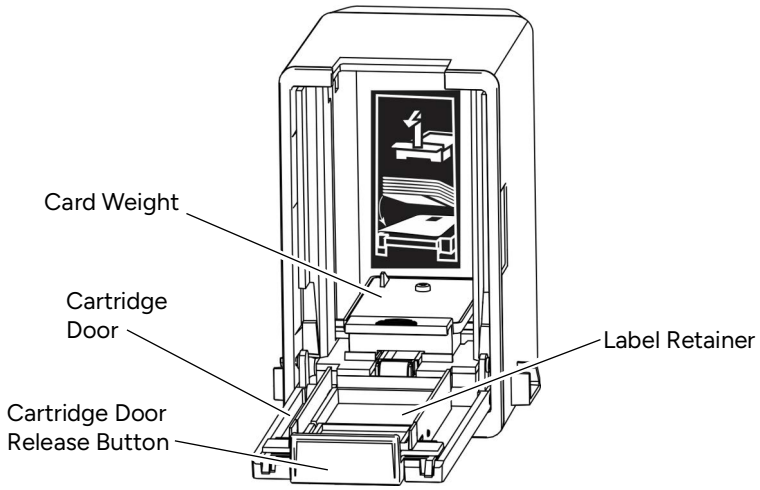

Cartridge Door Release Button	The door release button allows you to open the cartridge door. Press down on the release button.
Cartridge Door	The cartridge door swings down to provide access to the cartridge to load cards.
Card Weight	The card weight maintains a downward pressure on the loaded cards so that they enter the printer properly. Lift the card weight to the top of the cartridge and gently pull it forward until it locks in position. A diagram inside the cartridge shows how to position the card weight and load cards. **Note:** Do not place the cards on top of the card weight.
Label Retainer	The label retainer allows you to insert a paper label inside the cartridge door. Use a label to identify the cartridge number or the type of cards loaded in each cartridge. Use a flathead screwdriver to open the label retainer door.

Manual Feed Input Hopper

Printers with a manual feed input hopper require cards to be loaded individually by the user.

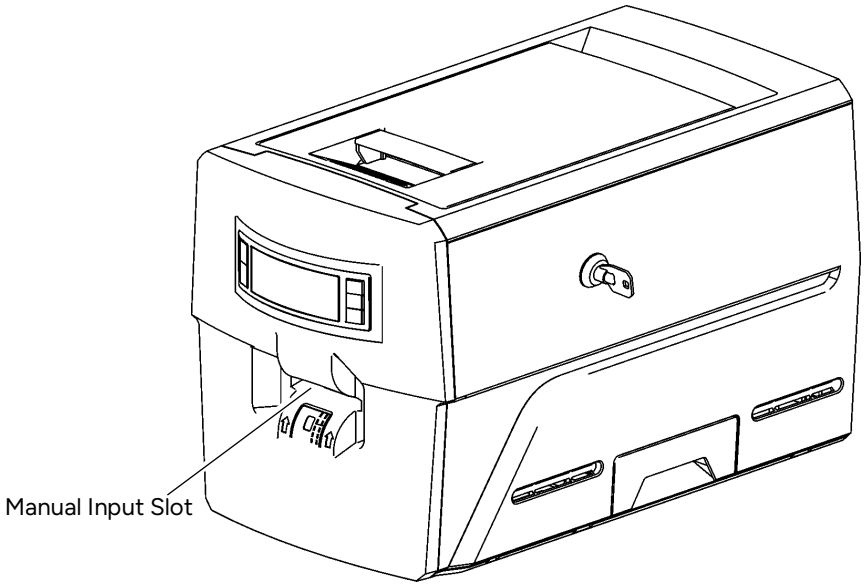

Manual Input Slot Load a card into manual input slot on the when prompted by a message on the LCD panel. Refer to "Manual Feed Input Hopper Printer" on page 36.

Inside the Printer

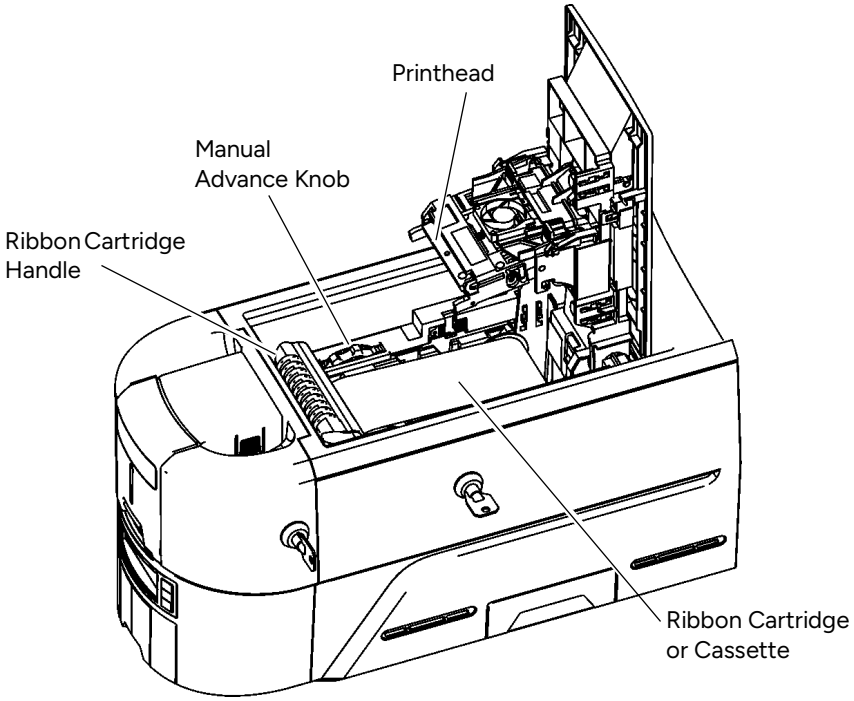

Printhead	The printhead transfer the card images to the card using the print ribbon.
Manual Advance Knob	The knob moves a card in the track to clear a card jam.
Ribbon Cartridge Handle	Lift up the handle on the ribbon cartridge or cassette to remove it from the printer.
Ribbon Cartridge or Cassette	The ribbon cartridge or cassette holds the print ribbon and cleaning roller.

Print Ribbons

Depending on the printer model, the print ribbon is available as a replaceable roll that is loaded on the ribbon cartridge, or as part of a prefilled print ribbon cassette.

Ribbon Cartridge

The ribbon cartridge holds a roll of ribbon that you can replace when it runs out. The cartridge also holds a cleaning roller that is replaced with each ribbon change. Refer to "Load the Print Ribbon Cartridge" on page 39.

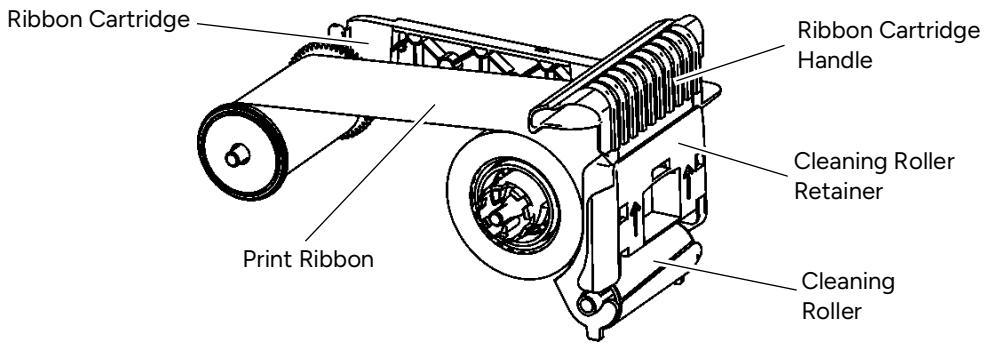

Ribbon Cartridge	The ribbon cartridge holds a replaceable print ribbon.
Print Ribbon	The print ribbon is used to apply images to the card.
Cleaning Roller	The replaceable cleaning roller removes dust and other particles from the cards as they move into the printer.
Cleaning Roller Retainer	Pull up on the retainer to load the cleaning roller on the print ribbon cartridge. Release the retainer to secure the roller in position.
Ribbon Cartridge Handle	Use the handle to remove the ribbon cartridge from the printer.

Prefilled Print Ribbon Cassette

The prefilled print ribbon cassette is an all-in-one, one-time-use print ribbon, cleaning roller, and ribbon cartridge.

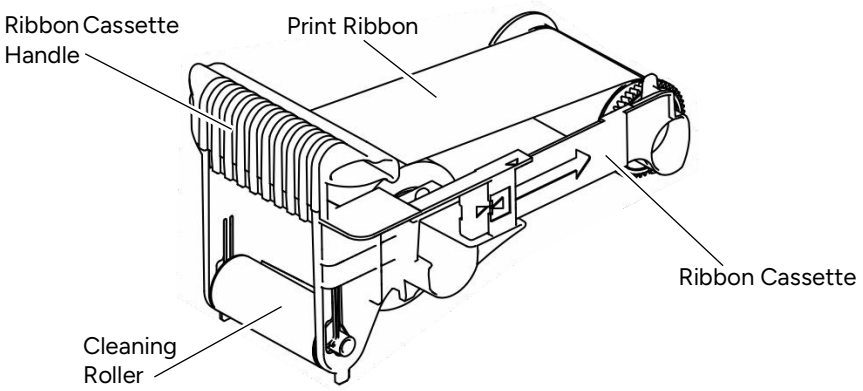

Print Ribbon	The print ribbon is used to apply images to the card.
Ribbon Cassette Handle	Use the handle to remove the cassette from the printer.
Cleaning Roller	The cleaning roller removes dust and other particles from the cards as they move into the printer. The cleaning roller is pre-installed on the cassette.
Ribbon Cassette	The ribbon cassette is shipped in a closed position and must be extended to its fully open position before installing it in the printer. Refer to "Install the Prefilled Print Ribbon Cassette" on page 40.

Optional Components

ES1 Emboss Module

The ES1 embossing module can be added to the DS4 printer to add embossing and indent features to the card design. Refer to the *ES1 Emboss Module User's Guide* for more information.

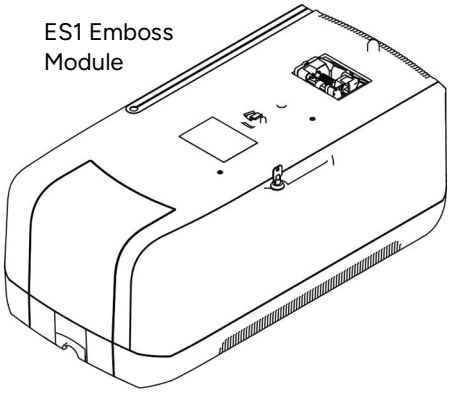

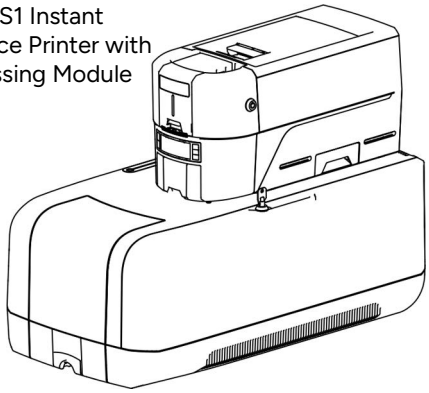

Rear Indent Module (RIM)

The RIM indent module can be added to the DS4 printer to add indenting to the card design. Refer to the *Rear Indent Module (RIM) User's Guide* for more information.

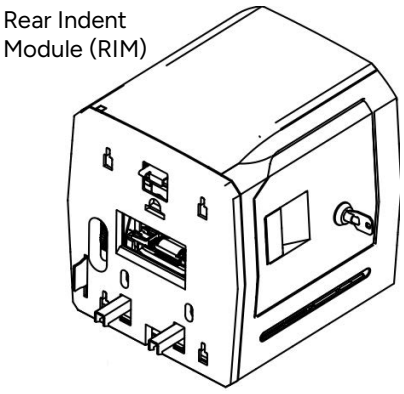

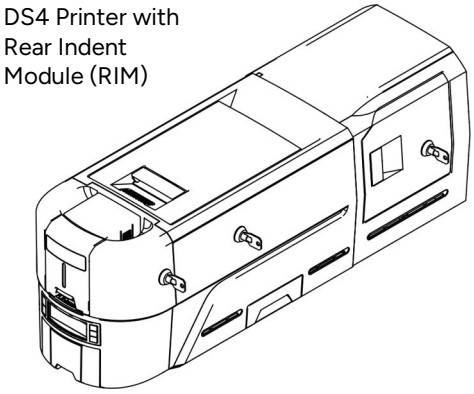

Durable Graphics Module (DGM)

The DGM module can be added to the DS4 printer to add UV curable graphics to the card design. Printing UV curable graphics with the DGM requires UV print ribbons. Refer to the *Durable Graphics Module (DGM) User's Guide* for more information.

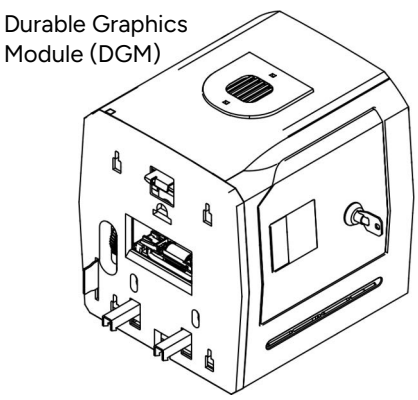

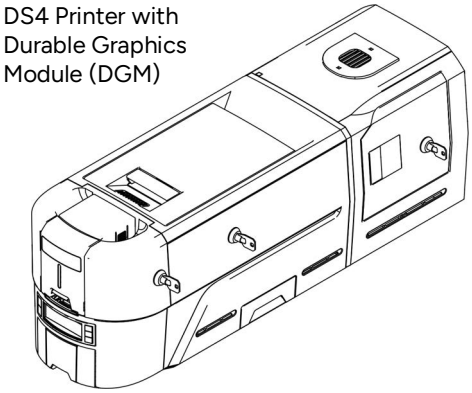

Printer Configuration Label

The printer configuration label on the side of the cover swingarm shows the components installed. It provides information that is useful when requesting service.

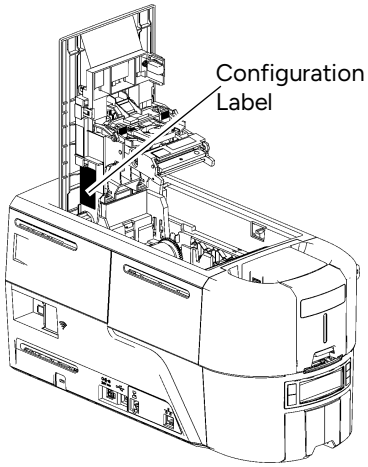

The label shows the following information:

- Printer model and serial number
- Configuration, which includes options installed in the printer
- Date and country of assembly

Additional labels may be attached to the printer to indicate components installed after the printer was manufactured.

Option	Configuration Code
Printer Model Features	H0,H00=No Hopper (Multi-Hopper Ready) H4=DS4 Printer 125-Card Input Hopper with additional features (locks and card sensors) H7=DS4 Kiosk H18=DS4 with Manual Feed Hopper
Main Board	Ex=Main Board option, where x indicates your printer model.
Duplex	D0=Simplex, Duplex Upgrade Ready D1=Duplex D2=Duplex Only blank=Simplex
Magnetic Stripe	M1=ISO M2=JIS blank=No Magnetic Stripe Option
Smart Card	S*x*=Smart Card option, where *x* indicates the type of smart card reader installed in the printer (refer to the printer's *Installation and Administrator's Guide* for a list of smart card readers supported by the printer and their option codes) blank=No Smart Card option
Rear Modularity	R1=Rear Modularity blank=No Modularity
Printing	blank=300 DPI Printhead
Locks	L1=Locks L2=Mechanical Lock blank=No Locks
Secure Scramble	U1=Secure Scramble blank=No Secure Scramble
Covers	Cx=Covers option, where x indicates your printer model.

Multi-Hopper Configuration Label

If the printer is equipped with an optional multi-hopper, the multi-hopper component has a separate configuration label. This configuration label is located on the back of the component. A second multi-hopper configuration label is located in the hopper receiver of the H2 cartridge. Remove the H2 cartridge to view the label.

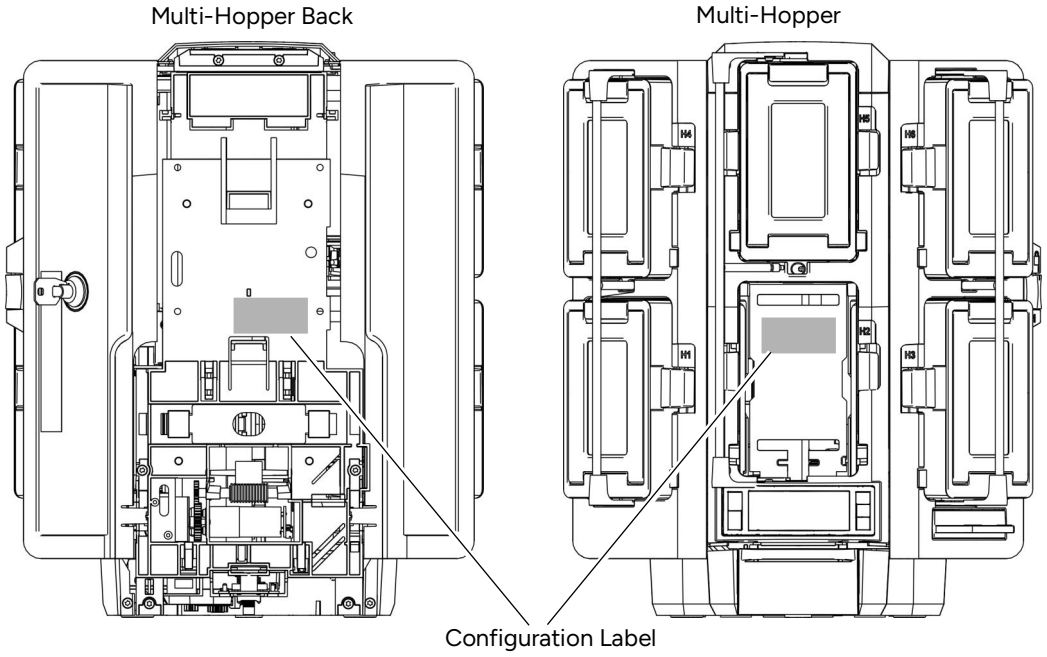

The label shows the following information:

- Model name and serial number of the multi-hopper
- Configuration code
- Date and country of assembly

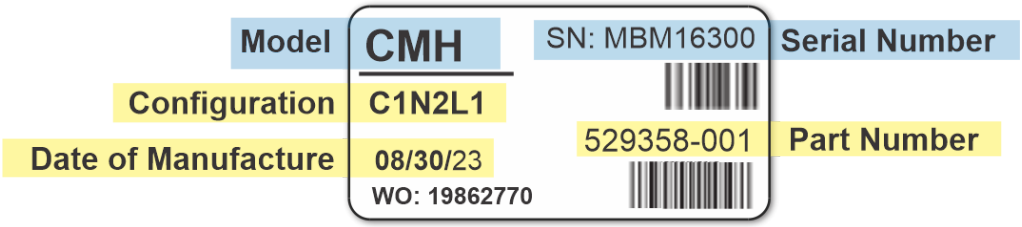

Option	Configuration Code
Hopper Cassette Type	C1=6 125-Card Removable Input Hoppers
Printer Type	N2 = DS3, DS4
Locks	L1=Multi-Hopper Lock blank=No lock

Chapter 3: Using the Printer

3

This chapter describes how to perform the basic tasks required to operate the printer.

Printer Overview

The Card Printer is used with other equipment and software to create a card personalization system. The system produces cards for a specific purpose, and the cards must meet defined requirements.

Equipment

The system can include:

- A PC with Adaptive Issuance™ Instant Financial Issuance (formerly CardWizard) software.

  The printer works with Instant Financial Issuance software, which processes the card data and obtains the needed authorization from the financial system that manages customer accounts. Instant Financial Issuance software links to the interface used at the issuance sites.

- Capture devices (optional), such as a signature capture pad or PIN pad.
- The printer with supplies and a facility power source.
- A data connection between the printer and PC. The connection can be via USB, network,
  Wi-Fi (if installed), or a Cloud connection.
- A network or Cloud data connection between the printer and PC.

Tasks and Users

Typical roles in a card personalization system include:

- The operator, who makes cards, loads supplies, and handles minor problems such as card jams.
- The system administrator, who sets up the card printer and other hardware, sets up card designs, configures card production software, and identifies the best use of the card printer in the organization

Secure Encryption

Secure encryption means that all data entered is converted into a secure form of code by your software application before it is sent to the system. The printer decrypts the code and sends the data to the magnetic stripe or smart card chip on the card.

The printer uses TLS encryption for maximum security. Refer to the printer's *Installation and Administrator's Guide* for complete information about using secure printing.

Printer Controls

The front panel of the printer provides the controls you use to operate the printer. The front panel controls are described in detail in the following sections.

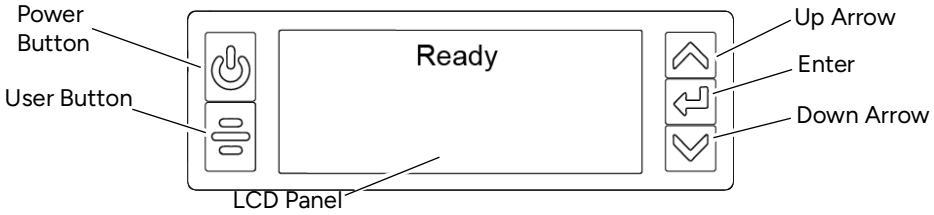

Power Button

Press the POWER button for 1 to 2 seconds to power on the printer. The printer LCD displays Initializing while the printer performs system checks and powers on.

To power off the printer, press the POWER button for 1 to 2 seconds until the printer begins to shut down.

To power off the printer while processing cards, press the button for 2 or more seconds. Card jobs in the printer do not complete.

Do not unplug the printer power cord to power off the printer.

User Button

Press the USER button for 1 to 2 seconds to suspend the printer or to cancel a print job. Press the USER button to resume/restart a print job.

Down Arrow, Up Arrow, and Enter Key

Use the arrow keys to move through the printer menu system, and the ENTER key to make a selection.

Press the up or down arrow key while the LCD panel displays **Ready** to display additional information about the printer on line 3, including the printer serial number, IP address, supply part numbers, and firmware version. If the system includes optional components, information about those options also displays. If you do not press a key for 30 seconds, the LCD panel returns to the default **Ready** message.

- If multiple connection types are present, (for example, USB, IPv4, Wi-Fi), only the first connection address displays.
- To see the IPv6 addresses available to the printer, you must use the LCD Status menu. Refer to "Retrieve an IPv6 Address" on page 30.

When you use the arrow keys to view the printer IP address, the LCD panel also displays a QR code. Scan the QR code from a mobile device to start the Printer Dashboard to see additional printer information and work with the printer.

To successfully scan the QR code on the IP address panel requires a camera with a resolution of 5 megapixels or higher.

LCD Panel Icons

The LCD panel displays icons to indicate the status of the printer.

Icon	Description
	WiFi is enabled and connected.
	WiFi module is installed, but not connected.
	Cloud connection is active.
	Cloud is enabled but not connected.
	There is an issue with the card supply. Additional information displays on line 3 of the LCD panel. The LED light bar blinks. Refer to "Printer Messages" on page 72 for a list of LCD messages that correspond to card issues. The cards icon displays on the LCD panel with the message "Cleaning Needed" when the printer has reached the preset card count to request cleaning. Run a cleaning card to reset the card count. The cards icon no longer displays on the LCD panel when the cleaning card procedure is complete. Refer to "Clean the Printer" on page 48.
	The printer is unlocked. The LED light bar blinks.

Icon	Description
	There is an issue with the print ribbon. Additional information displays on line 3 of the LCD panel. The LED light bar blinks. Refer to "Printer Messages" on page 72 for a list of LCD messages that correspond to print ribbon issues.
OC	OpenCard is enabled.

LCD Panel Menus

The LCD panel shows the printer's menu system and displays printer messages or conditions.

For a list of error messages and recovery information, refer to "Printer Messages" on page 72.

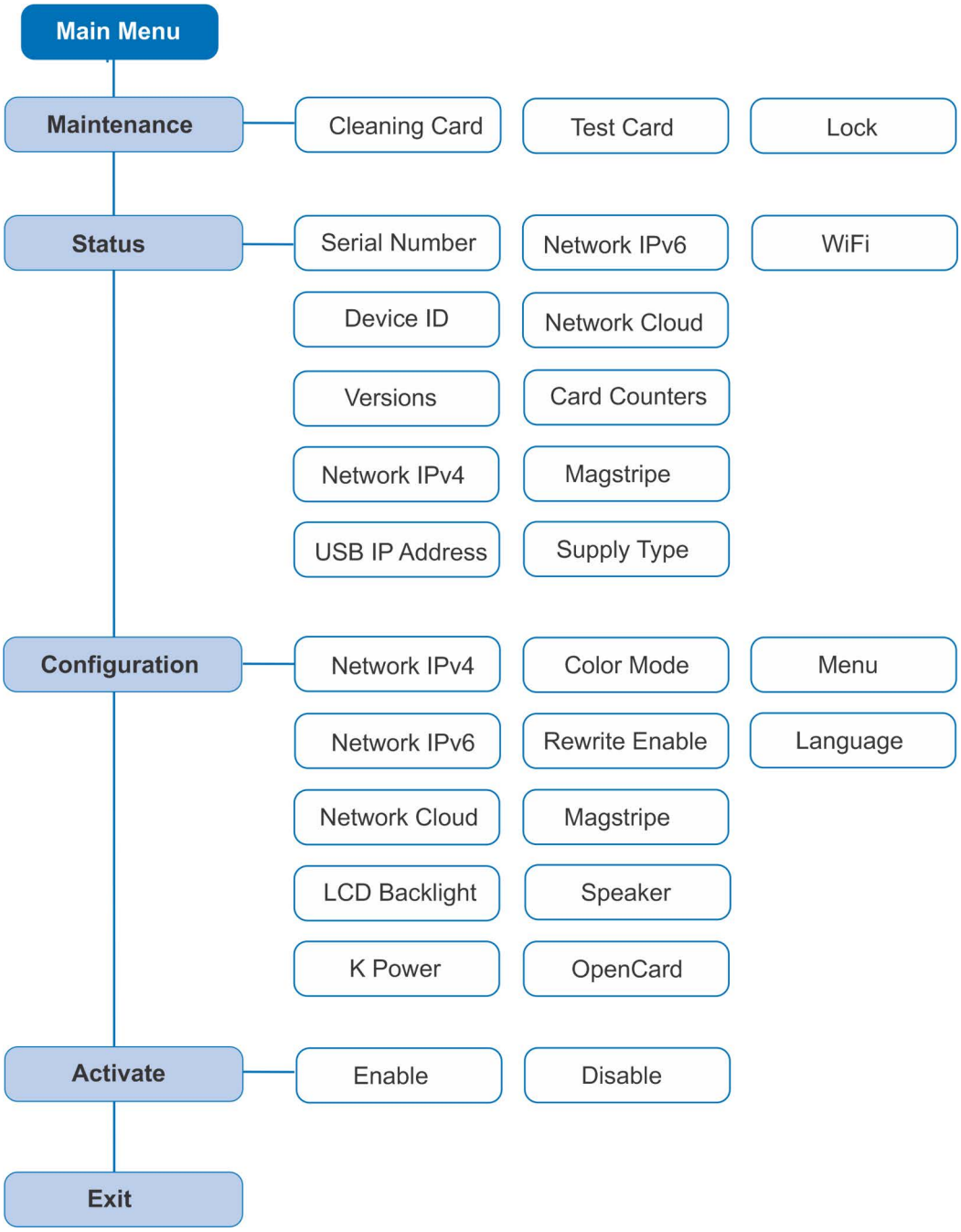

When the printer is in the **Ready** status, the LCD displays the name of the printer.

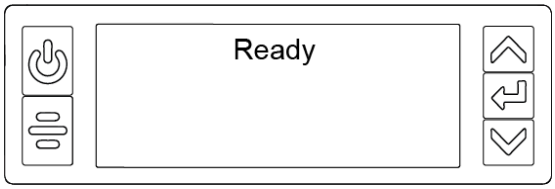

Press the USER button to suspend the printer. Then, press ENTER to enter the menu system. Use the arrow keys to move through the menus, and press ENTER to make a selection. The menu system has four major branches:

- Use the **Maintenance** menu to run a cleaning card, print a test card, or reset the locks on a printer with locks.
- Use the **Status** menu to see settings and data about the printer.
- Use the **Configuration** menu to change printer settings.
- Use the **Activate** menu to enable or disable the printer for transport.

The Activate menu is used only for systems that may require deactivation for transport or reactivation following service.

HINTS & TIPS

- You can access the menu system when **Ready** displays on line 1 of the LCD panel.
- The printer returns to the **Ready** status after 2 minutes of no activity. Changes that have not been applied are lost.
- To leave a selection without changing the value, press the up or down arrow key until **Exit** displays, and then press ENTER.

Retrieve the Printer's Network IP Address

You need the printer IP address to perform some tasks. For example, the XPS Card Printer Driver asks you to enter the network IP address during installation. You also can launch the Printer Dashboard by entering the printer IP address in a browser window.

To display the IP address, you can do one of the following:

- Press the up or down arrow key while the printer displays **Ready**. Refer to "Down Arrow, Up Arrow, and Enter Key" on page 23.
- Use the LCD menu system Status menu.

If the printer is configured to use a static IP address, the printer's front panel displays the address even when the printer is not connected to a network. In addition, the LCD displays a "+" if the network is active, or a "-" if the network is inactive, as a prefix to the static IP address.

The printer supports both IPv4 and IPv6 addressing. Because an IPv6 address is much longer than an IPv4 address, the LCD displays the two types of addresses differently.

Retrieve an IPv4 Address

Do the following to display an IPv4 address using the Status menu. You also can display the subnet mask, gateway address, and MAC address, if necessary.

1. Begin with the printer in **Ready** status. Press the USER button.

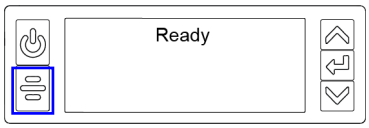

2. **Suspended** displays on line 1 of the LCD panel. Press ENTER to enter the menu system.

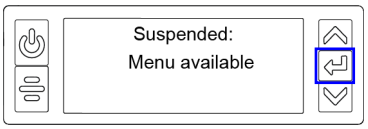

3. Access the **Status** menu in the LCD menu system:
   a. Press the down arrow to display **Status** on line 3.

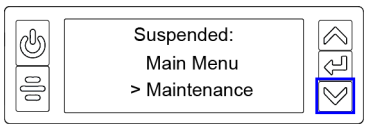

   b. Press ENTER to enter the **Status** menu.

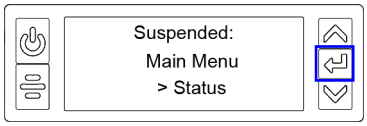

c. Press the down arrow until **Network IPv4** displays on line 3.

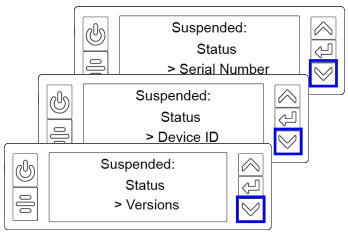

d. Press ENTER to display the **Network IPv4** menu.

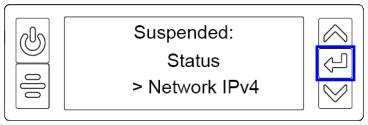

4. Press the down arrow to display **IP Address** on line 3.

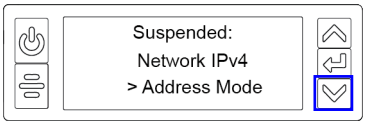

5. Press ENTER to display the IP address. Record the IP address.

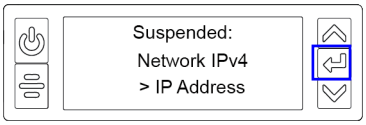

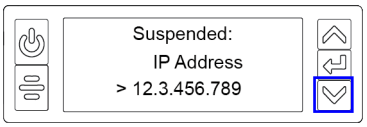

6. Press the down arrow to display the Subnet Mask on line 3. Record it, if necessary.

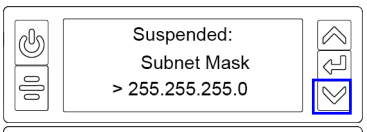

7. Press the down arrow to display the Gateway Address on line 3. Record it, if necessary.

   Press the down arrow again to display the MAC address of the printer.

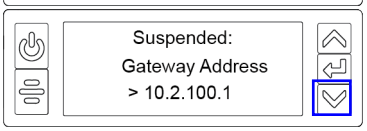

8. Press the down arrow until **Exit** displays on line 3 and then press ENTER.
9. Press the USER button to return the printer to **Ready**.

Retrieve an IPv6 Address

A printer on an IPv6 network can be configured to use one or more of the following methods, depending on how the network is set up:

- **Link Local IPv6 address:** The printer and PC clients are restricted to the same subnet. Link local is enabled automatically when IPv6 is enabled and offers the best security for your network.
- **DHCPv6:** A DHCPv6 server is externally configured to give out an IPv6 address.
- **Stateless Address AutoConfiguration (SLAAC):** One or more routers with IPv6 enabled on the subnet give out a subnet prefix that allows access to IP addresses.
- **Manual IPv6 Address:** The printer has a designated IPv6 address on a specified subnet. The address does not change without manual intervention. This is similar to an IPv4 static IP address.

The method used can be enabled or disabled using the LCD Configuration menu or the Printer Dashboard. Refer to the Printer Dashboard Help for more information about enabling IPv6.

To display an IPv6 address using the Status menu, do the following.

1. Begin with the printer in **Ready** status. Press the USER button.

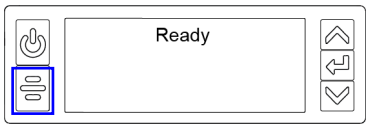

2. **Suspended** displays on line 1 of the LCD panel. Press ENTER to enter the menu system.

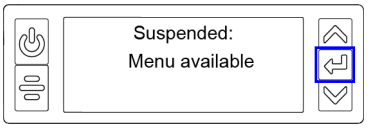

3. Access the **Status** menu in the LCD menu system:
   a. Press the down arrow to display **Status** on line 3.

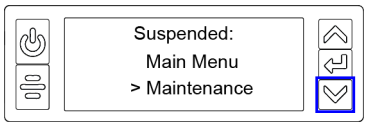

   b. Press ENTER to enter the **Status** menu.

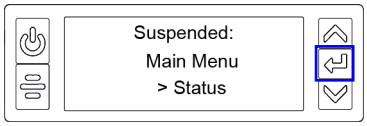

c. Press the down arrow until **Network IPv6** displays on line 3.

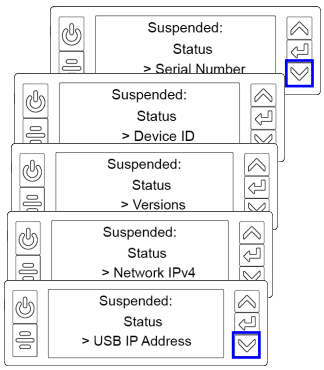

d. Press ENTER to display the **Network IPv6** menu.

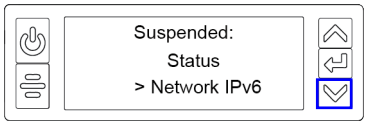

4. Press the down arrow until the address method used by your network displays on line 3.

   - DHCP
   - SLAAC
   - Manual
   - Local

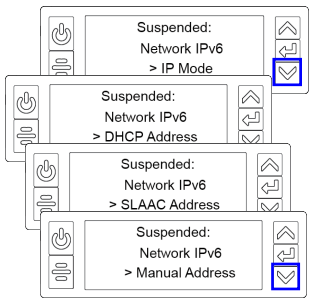

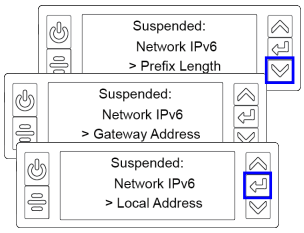

Press ENTER to display the IP address.

The following example shows the LCD display for an IPv6 Manual address. DHCP, SLAAC, and Local addresses behave the same, as does the gateway address for a manual address.

An IPv6 address is represented as eight groups of four hexadecimal digits separated by colons. The address requires 39 characters to display. Because the LCD displays a limited number of characters per line, the IPv6 address is spread across three screens of the LCD panel. You can press either the down arrow or the ENTER key to display the next section of the address. A digit at the end of line 1 indicates which section of the address is being displayed.

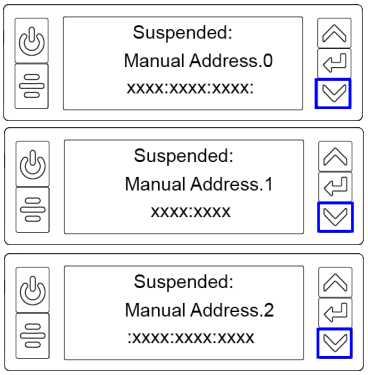

A stateless (SLAAC) configuration (if enabled) can have multiple values depending on the router setup. The LCD displays up to four SLAAC addresses. An additional digit in line 1 indicates which address is being displayed.

5. Record the address.
6. Press the down arrow until **Exit** displays on line 3.
7. Press ENTER. Then, press the USER button to return the printer to **Ready**.

Print a Test Card

The printer includes a one-sided test card that prints without using a driver or other source of card data. Use it to verify that the printer is printing correctly. Make sure that cards are in the input hopper and all supplies are loaded before you begin. Refer to "Load and Replace Supplies" on page 34 for complete information. You can print more advanced test cards from the Printer Dashboard.

The test card procedure also supports rewritable printing, when enabled.

1. Begin with the printer in **Ready** status. Press the USER button.

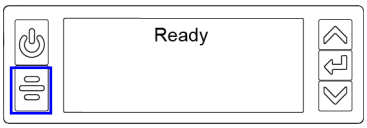

2. **Suspended** displays on line 1 of the LCD panel. Press ENTER to enter the menu system.

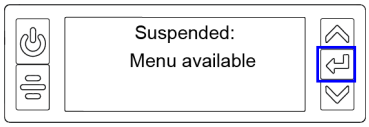

3. **Maintenance** displays on line 3. Press ENTER to enter the **Maintenance** menu.

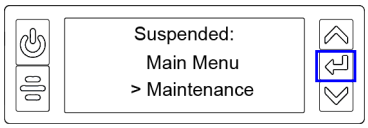

4. **Cleaning Card** displays on line 3. Press the down arrow to display **Test Card** on line 3.

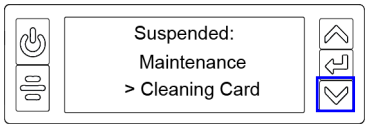

5. Press ENTER.

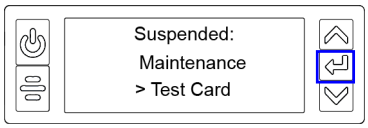

6. With **Test Card** displayed on line 2, press ENTER to display **Start** on line 3.

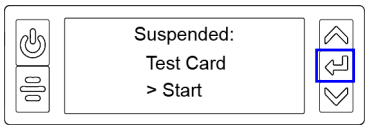

7. Press ENTER to print the test card.

   After the card prints, the printer returns to **Ready**.

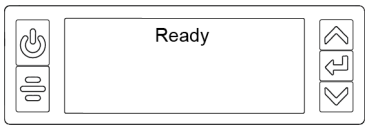

Load and Replace Supplies

To prepare the printer to print cards, load blank card stock into the input hopper, and load the print ribbon into the printer.

Load Cards

If you plan to insert cards through the exception slot, make sure that blank cards are available near the printer.

- Handle cards by the edges only, or wear approved card inspection gloves.
- Cards can stick together. Slide or fan the cards to separate the edges before placing them in the input hopper.
- Insert ISO magnetic stripe cards with the stripe (back side) facing down and to the right.
- Insert smart cards with the smart card chip facing up and toward the back of the hopper.

A diagram inside the input hopper shows the correct orientation for each type of card.

Single-Hopper Printer

1. Pull up on the latch to open the input hopper door. If your printer has locks, unlock the hopper lock to open the input hopper.
2. Load the cards into the input hopper. The hopper can hold up to 125 cards.
3. Close and lock the input hopper.

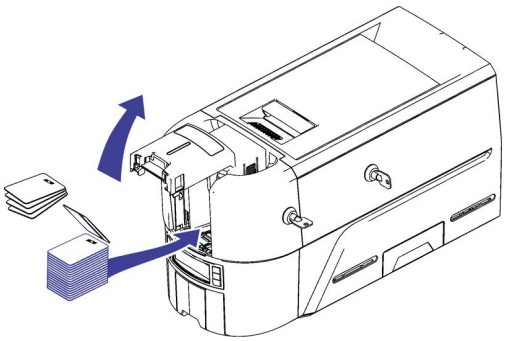

Use the Exception Slot

The exception slot allows you to insert a single card, such as a different card type than those loaded in the input hopper. The input hopper does not have to be opened to insert a card through the exception slot.

Do the following to insert a card into the printer exception slot.

1. Slide the card into the exception slot.
2. Push the card all the way into the input hopper. The card slides under any cards already in the input hopper so that it can be picked.

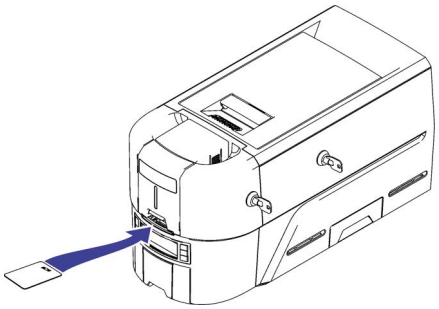

Manual Feed Input Hopper Printer

Printers equipped with a manual feed input hopper require cards to be loaded individually when requested. Condition 170 will display on the front panel when a print job is requesting a card to be loaded.

1. Hold the card by the edges and slide the card into the manual input slot.
2. Push the card all the way into the manual input slot until it is picked.

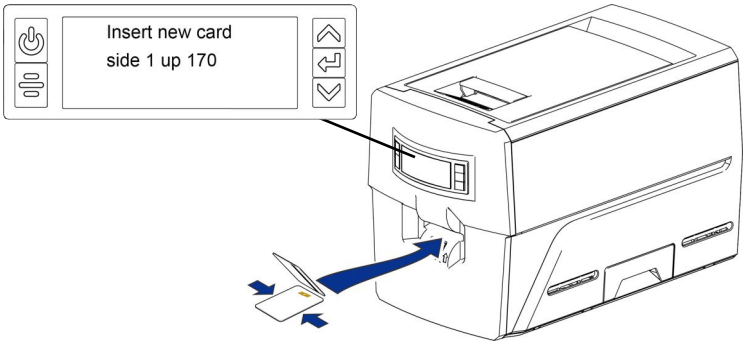

Multi-Hopper Printer

1. Unlock the multi-hopper lock.
2. Slide the lock bar release button (B1) to the left to release the hopper lock bars.
3. Rotate a lock bar to the left to provide access to the multi-hopper input cartridge that you want to load.

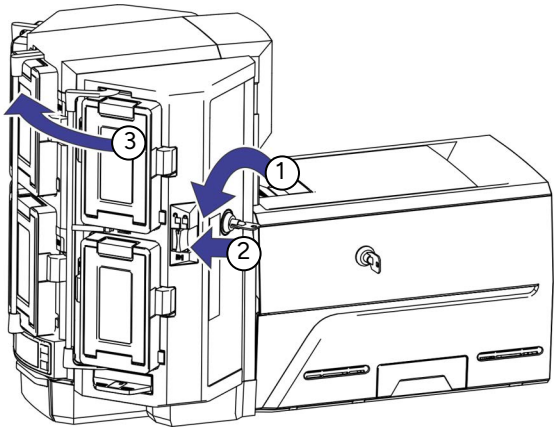

4. Press the cartridge release button at the top of the cartridge and open the cartridge door.
5. Lift the card weight to the top of the cartridge and gently pull it forward until it locks in position.
6. Load the cards into the input hopper cartridge. Handle the cards by the edges only, or wear approved card inspection gloves.

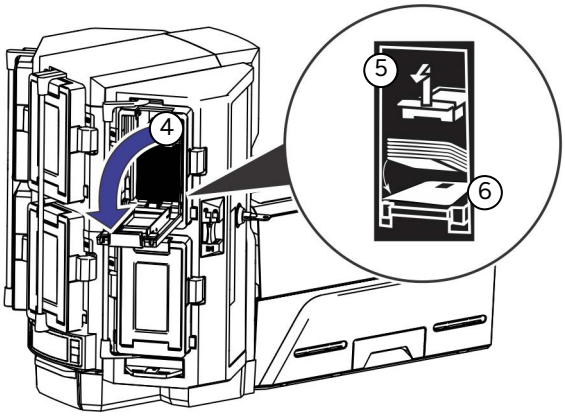

- The diagrams inside the cartridge show how to position the card weight and load cards. Do not place the cards on top of the card weight.
- You do not need to remove the cartridge from the multi-hopper to load cards.

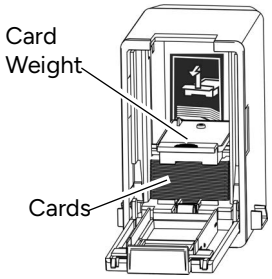

7. Close the cartridge door. This releases the card weight so that it is lowered on top of the cards.
8. Follow step 3 through step 7 to load cards into each input hopper cartridge.
9. Rotate all the lock bars back into position.
10. Slide the lock bar release button to the right to lock the lock bars into place.
11. Lock the multi-hopper.

Caution: The lock bars, lock bar release button, and the multi-hopper door lock all must be in the lock position for the printer to operate. If any of the locks are left in the unlock position, the printer issues an error. You must unlock and re-lock all locks to clear the error and place the printer in **Ready** status.

Use the Multi-Hopper Exception Slide

Use the exception slide to insert a single card into the printer without unlocking the multi-hopper or opening a hopper cartridge.

1. Pull the exception slide out from the multi-hopper.
2. Insert the card into the exception slide tray.
3. Push the exception slide back into the multi-hopper.

   The card is pulled into the printer to complete the job.

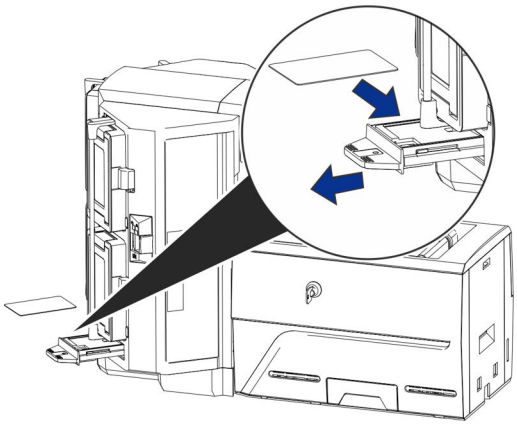

Replace the Print Ribbon

Depending on the printer model, the print ribbon is available as a replaceable roll that you install on the print ribbon cartridge, or a prefilled print ribbon cassette.

Load the Print Ribbon Cartridge

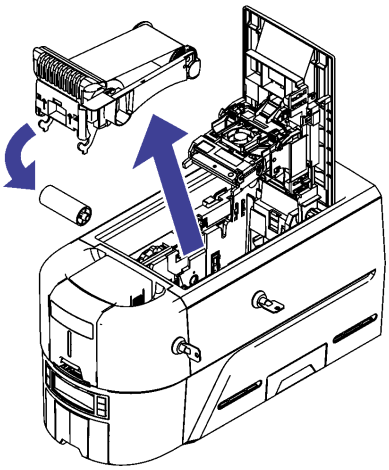

1. Open the printer cover and remove the print ribbon cartridge.
2. Remove the used ribbon spools and cleaning roller from the ribbon cartridge. Discard the used supplies.

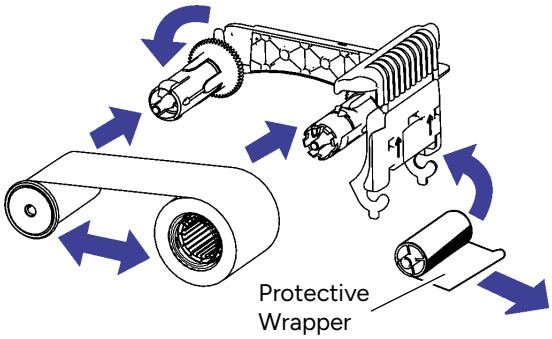

3. Load the print ribbon.
   a. Load a full roll of print ribbon (the purple spool) onto the purple spindle closest to the cartridge handle until it clicks into place.
   b. Place the silver take-up spool on the silver take-up spindle until it clicks into place.
   c. Wind the take-up spool counterclockwise one full turn.
4. Lift the cleaning retainer and load the cleaning roller on the ribbon cartridge.
5. Remove the protective wrapper from the cleaning roller.

Load a new cleaning roller with each new roll of print ribbon. Replace it between ribbon changes if you notice debris on the printed cards, or if the cleaning roller is no longer sticky.

6. Install the print ribbon cartridge in the printer.
   a. Hold the ribbon cartridge by the handle and lower it into the printer with the handle toward the front of the printer.
   b. Position the ribbon cartridge in the guides.
7. Close the printer cover. Press down on the ridges on the front of the cover to make sure that it latches completely.

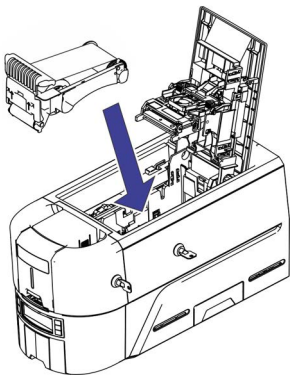

Install the Prefilled Print Ribbon Cassette

The prefilled print ribbon cassette is an all-in-one, one-time-use print ribbon, cleaning roller, and ribbon cartridge.

1. Open the printer cover and remove the used print ribbon cassette.

   Discard the used cassette.

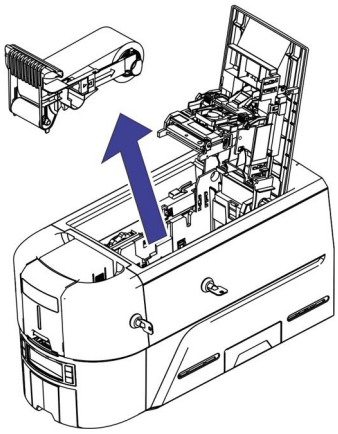

2. Open the cassette package and remove the print ribbon cassette.

   The cassette is shipped in a closed position.

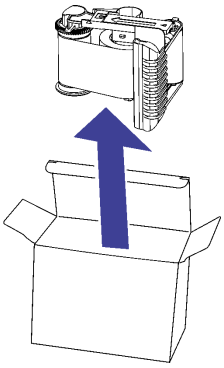

3. Extend the cassette to its fully open position.

   Pull out the front of the cassette until it clicks.

4. Remove the protective wrapper from the cleaning roller.

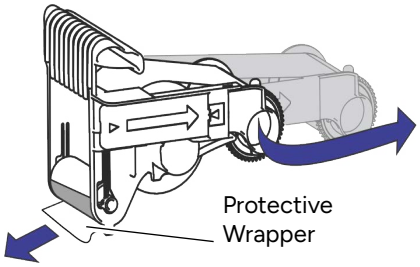

5. Install the cassette in the printer.

   a. Hold the ribbon cassette by the handle and lower it into the printer with the handle toward the front of the printer.

   b. Position the ribbon cassette in the guides.

6. Close the printer cover. Press down on the ridges on the front of the cover to make sure that is latches completely.

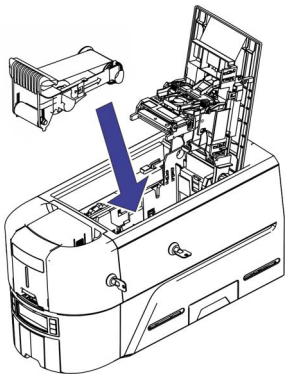

Use the Printer Dashboard

The Printer Dashboard is a web-based printer management tool. You can access the Printer Dashboard using one of the following methods:

- Enter the printer's IP address in a browser window. For example, https://12.3.45.678.
- Scan the QR code on the printer front panel with a mobile device when the printer IP address is displayed (refer to "Down Arrow, Up Arrow, and Enter Key" on page 23 for more information).
- Double-click the Printer Dashboard icon on the computer desktop. The Printer Dashboard icon is placed on the desktop when installing the XPS Card Printer Driver (refer to the *XPS Card Printer Driver User's Guide* for more information).

The system administrator sets up accounts for users who can access the Printer Dashboard.

Do the following to sign into the Printer Dashboard:

1. Display the Printer Dashboard sign in window.

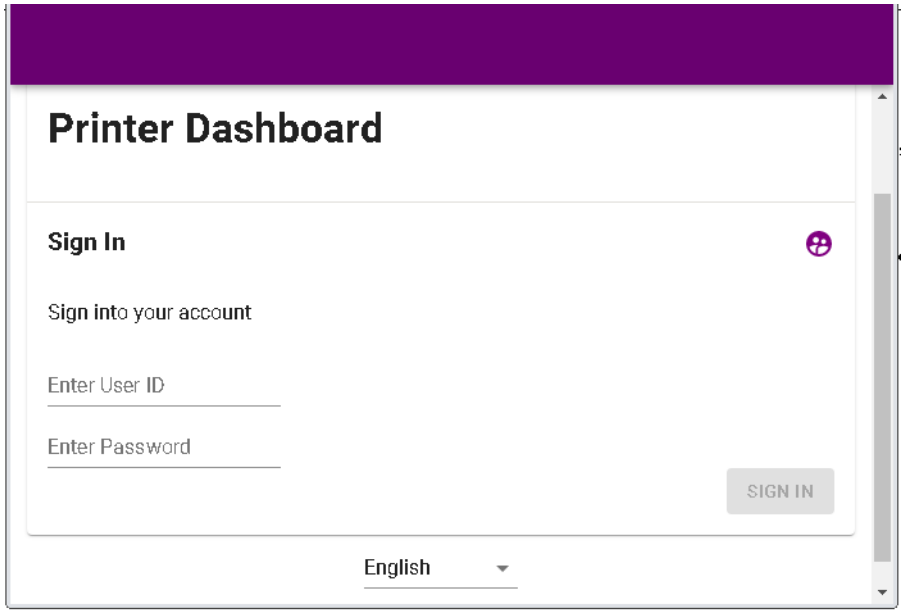

2. Enter your user ID and password.
3. Click **Sign In**.

Refer to the Printer Dashboard Help for information about how to use the dashboard.

Chapter 4: Print Cards

4

This chapter provides an overview of how to use application software to prepare card designs and send card data to the printer.

Before You Begin

Before you start to print cards, make sure that you have met the following requirements:

- Cards are loaded in the printer or available to insert (refer to "Load Cards" on page 34).
- Ribbon is loaded in the printer (refer to "Replace the Print Ribbon" on page 39).

  If your system includes the optional embosser, refer to the *Embosser User's Guide* for information about preparing the embosser.
- The card design is set up. If you need to set up or modify the design, refer to "Elements of Card Design" in the printer's *Installation and Administrator's Guide*, and the documentation for your card personalization software.

Financial printers use Adaptive Issuance™ Instant Financial Issuance (formerly CardWizard) software to create and print cards. Instant Financial Issuance software is a centralized application that processes card data and obtains the needed authorization from the financial system that manages customer accounts.

Instant Financial Issuance software performs the following functions:

- Prepares card data
- Links to financial software, so cards issued are linked with customer accounts
- Manages security

Refer to "Print from Instant Financial Issuance Software" on page 46 for instructions about how to send cards to the printer. Refer to your Instant Financial Issuance documentation for complete information about how to set up card designs and use Instant Financial Issuance software.

You can print a test card directly from the printer (refer to "Print a Test Card" on page 33) or from the Printer Dashboard (refer to the Printer Dashboard Help for complete information).

Print from Instant Financial Issuance Software

Adaptive Issuance™ Instant Financial Issuance (formerly CardWizard) issuance software is designed to work with your financial account management system to securely issue credit and debit cards that comply with industry standards.

1. Follow the Instant Financial Issuance instructions to select a card design, and enter and save the data for the card.
2. Send the card to the printer. Instant Financial Issuance software performs verification, prepares the card data for printing, and sends it to the printer.

Chapter 5: System Maintenance

5

This chapter provides information to help you maintain your printer for optimal performance.

Maintain the Printer

The printer performs best when it is cleaned on a regular basis. Follow the recommended cleaning guidelines to keep the printer in good working condition.

Clean the printer when:

- There is debris on completed cards.
- New print ribbon is installed.

You can perform the following cleaning tasks:

- Clean the Printer on page 48
- Clean the Printhead on page 54
- Empty the Reject Tray on page 56

Clean the Printer

The cleaning roller removes dust and particles from cards before they enter the printer. However, you also need to clean the inside of the printer regularly to maintain print quality. The cleaning card removes debris from the inside of the printer and from the transport rollers.

Run a cleaning card and replace the cleaning roller each time you change the print ribbon, or after every 500 cards processed by the printer, whichever comes first. Additional cleaning may be required if print quality diminishes, or more often depending on your environment. Refer to "Replace the Print Ribbon" on page 39 for details on loading the cleaning roller.

The Printer Dashboard displays a count of the number of cards that can be run before the printer should be cleaned. An administrator can change the maximum number of cards printed before cleaning using the Printer Dashboard. The message "Cleaning Needed" and the cards icon displays on the LCD panel when the printer has reached the preset card count to request cleaning. Refer to the Printer Dashboard Help for more information.

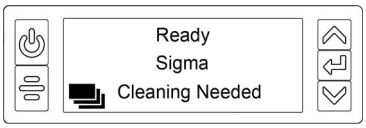

Message "294: Cleaning required" may display on the front panel when a card is printed after the maximum number of cards before required cleaning has been reached. The administrator can change if the 294 message displays on the front panel in Printer Dashboard using the ReportErrOnCleaningCardRequired setting.

The following procedures describe how to clean the printer using the LCD panel. You also can select to start the cleaning process from the Printer Dashboard.

Single-Hopper Printer

1. Unlock the printer and input hopper locks, if present.
2. Open the printer cover and remove the print ribbon cartridge or cassette. Close the cover.

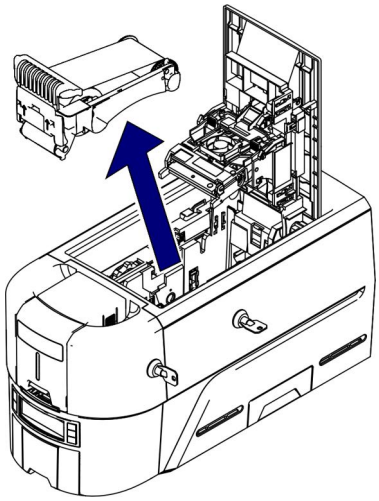

> Removal of the print ribbon cartridge or cassette is required for cleaning. Condition 350: Remove print ribbon displays on the front panel during the Run the Cleaning Card process if the print ribbon cartridge or cassette is not removed.

3. Open the input hopper cover and remove any unprinted cards. Handle the cards by the edges only, or wear approved card inspection gloves.

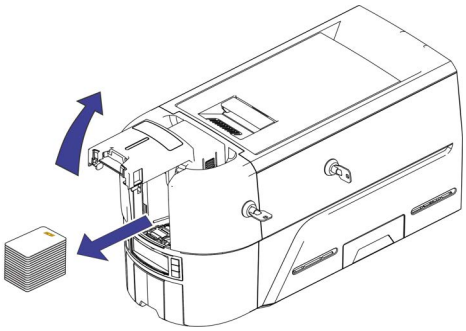

4. Load the cleaning card into the input hopper.

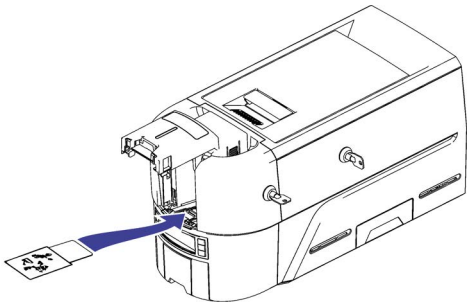

> The cleaning card is a one-time use supply. Do not re-use the cleaning card.

5. Close and lock the input hopper.
6. Continue with "Run the Cleaning Card".

Multi-Hopper Printer

1. Unlock the printer and open the printer cover.
2. Remove the print ribbon cartridge or cassette, close the cover, and lock the printer.

> Removal of the print ribbon cartridge or cassette is required for cleaning. Condition 350: Remove print ribbon displays on the front panel during the Run the Cleaning Card process if the print ribbon cartridge or cassette is not removed.

3. Pull out the multi-hopper exception slide and insert the cleaning card.

> The cleaning card is a one-time use supply. Do not re-use the cleaning card.

4. Push in the exception slide.
5. Continue with "Run the Cleaning Card".

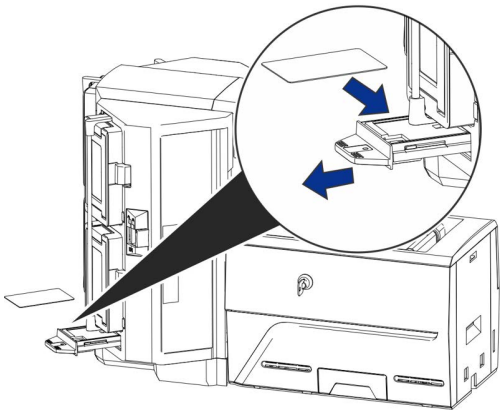

Run the Cleaning Card

Use the LCD menu system to start the cleaning cycle.

1. Begin when the printer displays **Ready**. Press the USER button.

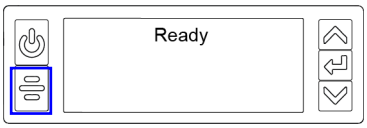

2. **Suspended** displays on line 1 of the LCD panel. Press ENTER to enter the menu system.

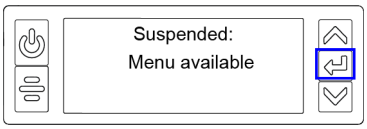

3. **Maintenance** displays on line 3 of the LCD panel. Press ENTER to enter the Maintenance menu.

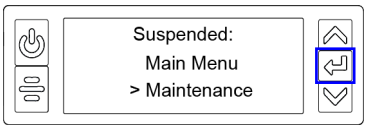

4. **Cleaning Card** displays on line 3 of the LCD panel. Press ENTER to enter the Cleaning Card menu.

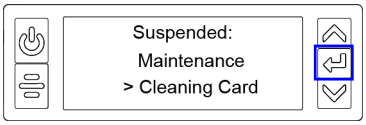

5. **Start** displays on line 3 of the LCD panel. Press ENTER to start the cleaning process.

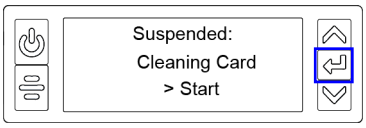

Condition 350: Remove print ribbon displays on the front panel if the print ribbon cartridge or cassette is not removed. Remove the print ribbon cartridge or cassette and press the USER button to continue.

6. **Insert cleaning card** displays on the LCD panel. Press the USER button to start the cleaning cycle.

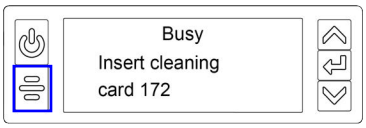

   The printer moves the card through the printer several times to clean the card track and transport rollers.

   When the cleaning cycle completes:

   - If the printer does not have locks, the cleaning card is ejected into the output hopper. Remove and discard the cleaning card.
   - If the printer has locks, the cleaning card is placed in the printer reject tray.

   When you clean a system with an attached component, the cleaning card moves into the component to complete the cleaning cycle. Refer to the user documentation for each component for complete information.

7. Remove the used cleaning card.
8. Continue with "Prepare the Printer for Use" on page 53.

Prepare the Printer for Use

1. Unlock the printer locks.
2. Replace the cards in the input hopper of a single-hopper printer and close and lock the hopper.
3. Install a new print ribbon and cleaning roller on the ribbon cartridge (refer to "Load the Print Ribbon Cartridge" on page 39), Or, prepare the ink ribbon cassette (refer to "Install the Prefilled Print Ribbon Cassette" on page 40).
4. Load the print ribbon into the printer.
5. Close the printer cover. Press down on the ridges on the front of the cover to latch it completely.
6. Lock the printer.
7. Discard the used cleaning card and cleaning roller.

If the printer was cleaned without removing the print ribbon cartridge, run a test card to clear away any cleaning residue left behind on the ribbon. Refer to "Print a Test Card" on page 33 for details.

Clean the Printhead

The printhead does not require routine cleaning, however debris can get stuck on the printhead edge and cause horizontal lines in the printed image.

Use the a cleaning swab to clean the printhead.

Clean the edge of the printhead in the following situations:

- There are unprinted lines on the finished card. This usually indicates dirt or contaminants on the printhead.
- The printhead is touched accidentally. Oils from hands can affect print quality and damage the printhead.
- A ribbon break caused part of the ribbon to stick to the printhead or printhead cover.
- The printhead has been replaced.

Do the following to clean the edge of the printhead:

1. Power off the printer.
2. Unlock the printer and open the printer cover.
3. Open and remove a cleaning swab from its package.
4. Retract the printhead protective cover using side handles. Hold in the retracted position while cleaning.

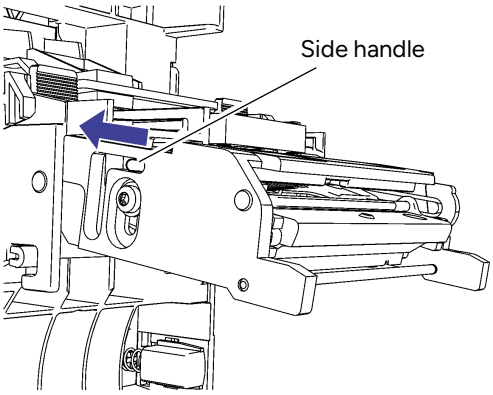

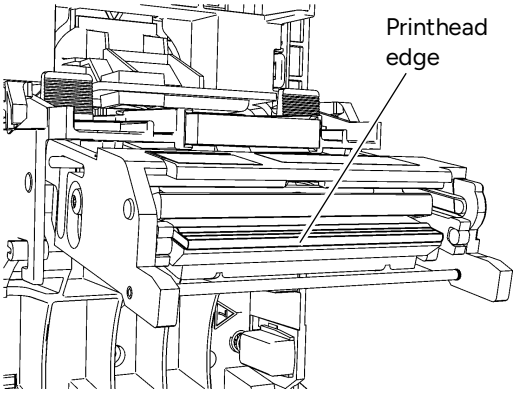

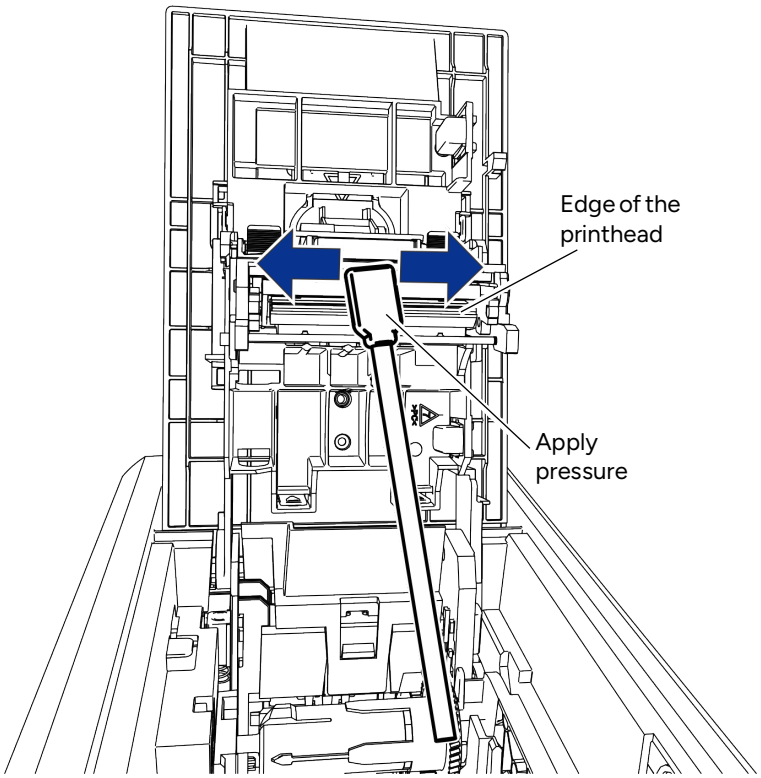

5. Hold the swab vertically and scrub the printhead edge back and forth from end to end while using your thumb to apply pressure. Scrub back and forth quickly for at least 10 seconds.
6. Close the printer cover. Press down on the ridges on the front of the cover to make sure that it latches completely on both sides.
7. Power on the printer.
8. Print a sample card to verify the quality of printing.

Hints & Tips

- Avoid touching the printhead edge with your fingers. Contamination due to skin oils eventually can damage the printhead.
- Avoid touching the printing edge of the printhead cartridge with any sharp objects that can permanently damage the printhead.
- Use only the cleaning swab to clean the printhead. Other materials can stick to the printhead and cause damage.
- Use a cleaning swab one time only. Discard it after you clean the printhead.

Empty the Reject Tray

The printer places rejected cards (unfinished cards or cards that were not processed properly) in the reject tray.

An administrator can change the reject card location to the output hopper using the Printer Dashboard.
Printers without a reject tray eject the card into the output hopper.

Do the following to remove cards from the reject tray.

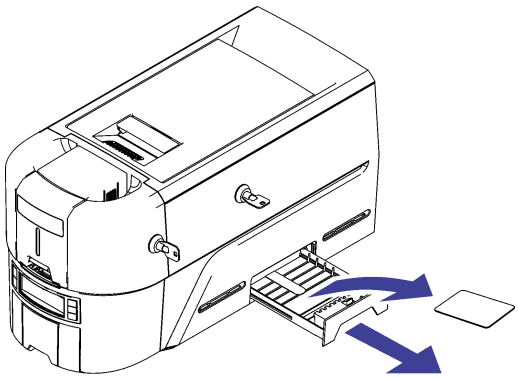

1. Unlock the printer and pull out the reject tray.

   You must unlock the printer to pull out the reject tray.

2. Remove the cards from the tray.
3. Close the tray and lock the printer.

Chapter 6: Troubleshooting

6

This chapter provides information to help you respond to card printer messages. It also explains how to clear card jams and how to recover from other errors.

This section helps you identify and fix basic issues that can occur during printing. Also refer to your Instant Financial Issuance (formerly CardWizard) documentation for additional troubleshooting information. *Data Formatting Guide*

The section starts with an overview of card production and printer issues you may encounter:

- Locate a Problem Within the Card Production System on page 58
- Locate a Problem with Basic Printer Functions on page 59

This section also describes troubleshooting for the following:

- Installation Problems on page 60
- Card Appearance on page 61
- Magnetic Stripe Problems on page 66
- Clear a Card Jam on page 68
- Repair a Broken Ribbon on page 70
- Messages and Conditions on page 70

Locate a Problem Within the Card Production System

For typical components of the system, refer to "Printer Overview" on page 21. If any one of the following components does not work properly, printing cards can be affected.

- Card production software

  Card production software formats the types of data used to print cards. Make sure that the card production software features you use work with your printer.

- Other components of the system

  An ID or badge system usually includes a camera to take photos, and may include other capture devices for biometric data. The proper use and maintenance of these components is important to the quality of cards you produce.

Locate a Problem with Basic Printer Functions

If the system is not working as expected, follow these steps in the order listed to isolate the source of the problem before you contact your service provider.

1. Make sure that the power cord is plugged in and the printer is powered on.
2. Does the printer power on and display **Ready** on the front panel?
   - If the printer powers on correctly, continue to step 3.
   - If the printer powers on, but **Improper Shutdown** displays on the LCD panel, press the USER button for approximately 2 seconds. **Ready** should display.
   - If the printer powers on but does not display **Ready**, the printer is not working properly. Request service for the printer.
   - If the printer does not power on, make sure that the printer power supply is working properly.
     - If the power supply is working properly, request service for the printer from your system administrator.
     - If the power supply is not functioning, replace it and begin with step 1.
3. Print a test card from the printer front panel. Refer to "Print a Test Card" on page 33 for more information.
   - If the test card prints, the printer is working correctly. Continue to step 4.
   - If the test card does not print, the printer is not working correctly. Request service for the printer.
4. Connect the printer data cable, if necessary. Make sure that you use the same type of cable (USB or network) used when the printer was installed.

5. Print a card using your card production software.
   - If the card prints, your software is working successfully with the printer. Troubleshoot the card design, if necessary.
   - If the card does not print, check the following:
     - In the application, is the correct printer selected in the Print Setup or Print dialog?
     - If the printer produced a blank card, review the page size or other settings.

     If the card causes an error, the card might have a type of data the printer does not support.

Installation Problems

This section describes issues that prevent a successful installation and provides recommended solutions to those issues. Select from the following topics:

- Network Installation Troubleshooting on page 60

Network Installation Troubleshooting

Problem	Solution
The network cable is loose.	Reconnect the data cable to the network port and the printer. Restart the printer.

Problem	Solution
The printer displays **Ready** on the LCD panel, but it is not available.	Follow your network troubleshooting procedures to isolate and test each component of the computer-to-printer communication link. Suggestions: • Verify the computer-to-network connection by accessing a network resource, such as a network drive. • The network administrator can test communication between a server and the printer. • Make sure that the user is logged on to the network.
The printer is not configured with the correct network address	Make sure that the server name or IP address is entered in the Port Settings or Configure Port dialog box on the computer. For more information about retrieving the printer's IP address, refer to "Retrieve the Printer's Network IP Address" on page 28. Make sure that **Ready** displays on the printer's LCD panel.

Card Appearance

Card appearance problems can be caused by many different factors. Click the link below that best describes the card appearance issue on the printed card.

- Something did not print on page 62
- The color printing has flaws on page 62
- The printing is too light on page 64
- The printing is too dark on page 65
- The monochrome printing has flaws on page 65

Something did not print

Problem	Probable Cause	Solution
Nothing is printed on the card.	The print ribbon is loaded incorrectly.	Remove the print ribbon and install it correctly.
	The page size was not set to ISO ID-1.	Use your card production application to access the printer's print setup and select **ISO ID-1** for the page size. The correct page size is available after you select the printer.
Color printing on top of a black background does not print on the card.	The black panel of the ribbon is printing over the color panels.	The printer uses the print ribbon panels in sequence; the Y panel prints first, then M, and so on. The black panel of the print ribbon is used last and prints over the color panels. For best results, change the 100% black background to a color near black, so that it prints using the YMC (color) panels of the print ribbon. Refer to "Elements of Card Design" in the printer's *Installation and Administrator's Guide* for more information about color printing.

The color printing has flaws

Problem	Probable Cause	Solution
One or more lines appear on the card.	The printhead is dirty or damaged.	Clean the printhead. Refer to "Clean the Printhead" on page 54.
The print quality changes from the previous card.	The ribbon type was changed while card jobs were in the printer queue.	The type of ribbon installed in the printer determines the color profile used when the card is sent to print. If the ribbon type changes while jobs are queued, the card may not print correctly. Allow all queued jobs to complete before changing the type of ribbon in the printer. Changing to a ribbon of the same type does not affect printing.

Problem	Probable Cause	Solution
One color panel is not aligned correctly with other color panels.	The cards are slipping in the track.	Run a cleaning card. Refer to "Clean the Printer" on page 48.
	The cards are not the correct size for the printer.	Use cards that meet the size requirement for the printer. Refer to "Cards" in the printer's *Installation and Administrator's Guide* for specifications. If you must use the cards you have, ask your system administrator for help.
Printing is blurred.	The cards have a matte, not glossy, finish.	Use cards that meet the requirements for the printer. Refer to "Cards" in the printer's *Installation and Administrator's Guide* for specifications.
	The rollers are dirty.	Run a cleaning card. Refer to "Clean the Printer" on page 48.
	The printhead is dirty.	Clean the printhead. Refer to "Clean the Printhead" on page 54.
The printed card has small unprinted areas.	Unprinted cards have scratches.	Handle cards carefully. Refer to "Card Quality Guidelines" in the printer's *Installation and Administrator's Guide*.
	Cards have embedded particles, an uneven surface, or the card edge has burrs.	Use cards that meet the requirements for the printer. Refer to "Cards" in the printer's *Installation and Administrator's Guide*.
	The rollers are dirty or the card packaging contains debris.	Run a cleaning card. Refer to "Clean the Printer" on page 48.

Problem	Probable Cause	Solution
Part of the printed image is discolored.	Cards have fingerprints or other dirt on them.	Handle cards carefully. Refer to “Card Quality Guidelines” in the printer’s *Installation and Administrator’s Guide*.
	A signature panel is located on the other side of the card.	Design the card to avoid printing photos over signature panel residue.
	The rollers are dirty or the card packaging contains debris.	Run a cleaning card. Refer to “Clean the Printer” on page 48. Use cards that meet the requirements for the printer. Refer to “Cards” in the printer’s *Installation and Administrator’s Guide*.

The printing is too light

Problem	Probable Cause	Solution
Photos look faded.	The image capture system needs adjustment.	Color settings might not be optimal. Adjust color settings. Refer to the documentation for the image capture system, and “Color Printing” in the printer’s *Installation and Administrator’s Guide*.
The printing is very light.	The ribbon is loaded incorrectly.	Load the print ribbon correctly. Refer to “Replace the Print Ribbon” on page 39.
	The card was previously printed and has topcoat on it.	Print only new cards. Refer to “Cards” in the printer’s *Installation and Administrator’s Guide*.
	The printhead is not installed correctly.	Contact your service provider for instructions to install the printhead correctly.

The printing is too dark

Problem	Probable Cause	Solution
The card shows wrinkles in darkly colored areas.	The card includes very dark areas.	Change the design to use smaller areas of dark color.
	The printhead is not aligned correctly.	Contact your service provider.
All color printing is darker than intended.	Color adjustment is too dark. A change in the card stock you use can alter the appearance of printed cards.	Change the color adjustment settings. Refer to “Color Printing” in the printer’s *Installation and Administrator’s Guide*.

The monochrome printing has flaws

Problem	Probable Cause	Solution
Text has broken (partly printed) characters.	The monochrome (K) power setting is balanced to print both fine text and bar codes.	If the card does not include a bar code, increase the monochrome intensity. If the card includes fine text and bar codes, change the text to improve printing. Refer to “Monochrome Printing” in the printer’s *Installation and Administrator’s Guide*.
	The text is formatted to print with color, and the card is being printed with monochrome ribbon.	Contact your service provider. Format text to print black so that the text is not dithered.
Printing is uneven or is missing in some areas.	The monochrome (K) power setting is too low. The cards require a different setting.	Increase the monochrome intensity. Find a balance between printing all card data and causing wrinkles.

Magnetic Stripe Problems

To begin troubleshooting a magnetic stripe problem, first print a magnetic stripe test card from the Printer Dashboard. For complete information, refer to the Printer Dashboard Help.

The printer uses the coercivity set using the LCD panel or in the Printer Dashboard, and the data format set using the Printer Dashboard.

Problem	Solution
Cards are not loaded correctly.	Load ISO cards with the magnetic stripe (back side) facing down and to the right. Refer to "Load Cards" on page 34.
Cards do not have a magnetic stripe.	Load magnetic stripe cards in the input hopper. If the cards have a magnetic stripe, check the quality of the cards. Change card stock, if needed.
The card has dirt or damage on the magnetic stripe.	Encode and send a new card to print. If an error message displays indicating a magnetic stripe problem, run a cleaning card to clean the magnetic stripe head. Refer to "Clean the Printer" on page 48.
The magnetic stripe on the card is low-coercivity material and the High Coercivity setting is selected.	To use the cards you have, select low-coercivity encoding. Refer to the Printer Dashboard Help for more information about setting the coercivity. To encode with high coercivity, obtain cards manufactured for high-coercivity encoding. Refer to "Print a Test Card" on page 33.
The magnetic stripe on the card is high-coercivity material and the Low Coercivity setting is selected.	To use the cards you have, select high-coercivity encoding. Refer to the Printer Dashboard Help for more information. To encode with low coercivity, obtain cards manufactured for low-coercivity encoding.
The data for this job includes characters not allowed by the magnetic stripe format selected for the track.	Cancel the current print job. Make sure that you know which characters are allowed on the track. Change the data to be encoded, and resend the print job. Refer to "Magnetic Stripe Design" in the printer's *Installation and Administrator's Guide* for more information.

Problem	Solution
The magnetic stripe data was sent in an encoding format not supported by the track.	Review the encoding format setting for the tracks in the Printer Dashboard. Refer to the Printer Dashboard Help for more information. Make sure that the application is using the selected encoding format for the track. If the application and track are set to the same format, and the error message displays repeatedly, contact the application provider for assistance.
The application sent track data for a track not supported by the magnetic stripe module.	Verify the type of magnetic stripe option in the printer. If the printer label indicates a 3-track ISO module, you can send data for tracks 1, 2, and 3. If the printer label indicates a single-track JIS module, you can send data for track 1. The magnetic stripe option and cards must be capable of accepting and encoding each track of data sent by the card production software.

Use Advanced Troubleshooting Tools

The Printer Dashboard provides access to card design settings and additional troubleshooting tools. The Dashboard also allows you to perform advanced troubleshooting with the guidance of your service provider. Refer to the Printer Dashboard Help for more information.

Clear a Card Jam

A card jam occurs when the card does not reach the proper position for the next action, such as printing or ejecting the card.

You usually can resolve the error by pressing and holding the USER button for 2 seconds to cancel the print job so that the printer displays **Ready**. If the error persists, do the following to remove the card from the printer.

1. Open the printer.
2. Remove the print ribbon cartridge or cassette.

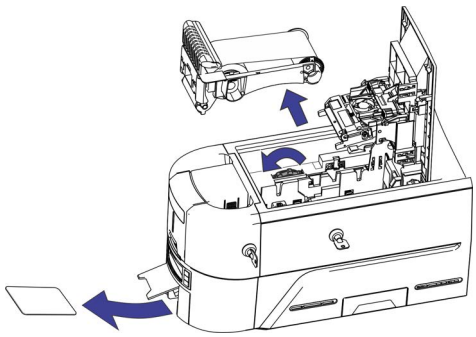

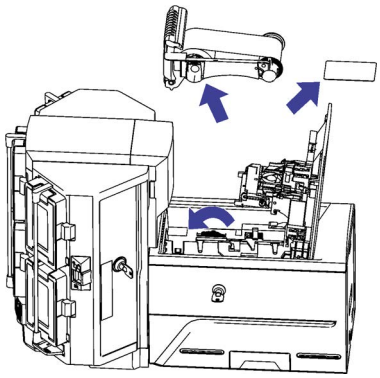

3. Turn the manual advance knob to move the jammed card until it exits into the output hopper of a single-hopper printer, or is accessible from the rollers in a single- or multi-hopper printer.
4. Remove the card.
5. Replace the ribbon cartridge and close the printer.
6. Press the USER button on the printer.

HINTS & TIPS

Check the ribbon to make sure that it is not torn. Refer to “Repair a Broken Ribbon” on page 70 and “109: Print ribbon problem” on page 75 to repair or replace the ribbon, if needed.

Repair a Broken Ribbon

A ribbon can break if the power applied by the printhead is too high. Do the following to repair a broken ribbon.

1. Open the printer and remove the print ribbon cartridge or cassette.

   Do not remove the used ribbon from the take-up spool.

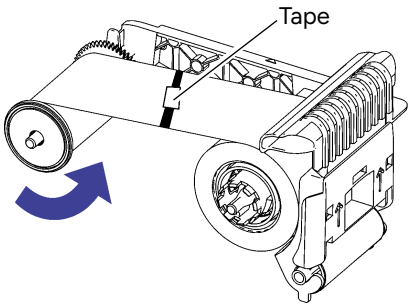

2. Trim the ends of the broken ribbon evenly.
3. Align the ends of the broken ribbon and apply adhesive tape to secure them.
4. Turn the take-up spool counterclockwise until the mended portion is wound around the spool two or three turns.
5. Reinstall the print ribbon cartridge in the printer.
6. Close the printer.

A broken ribbon can become stuck in the printhead cover. Check the cover to make sure that the ribbon is not stuck to the cover.

Messages and Conditions

When the printer cannot process a card, or a printer problem occurs, it issues a condition. The LCD panel on the front panel displays the condition code and a brief message. The condition also displays in the Printer Dashboard. In a shared printer environment, messages can differ slightly from the messages and conditions described in this section.

- Messages on the Printer LCD on page 71
- Messages in the Printer Dashboard on page 71
- Other Messages on page 71

Messages on the Printer LCD

The messages that display on the printer LCD focus on recovering from problems.

- The printer displays a message number and a short description for each message.

  The message also displays in the Printer Dashboard.

- Scan the QR code to the right of the message to display additional information on the Entrust website.

  To successfully scan the QR code on the LCD error message, the camera requires a resolution of 8 megapixels or higher.

- If asked by Technical Support, press and hold the down arrow to display a service code that further isolates the cause of the error.
- If more than one message was issued, the next message displays after you correct the problem and press the USER button.
- The LED light bar on the printer flashes while messages display on the LCD panel.

Messages in the Printer Dashboard

The Printer Dashboard also displays error messages. Follow the instructions in the message to continue working with the printer. Refer to the Printer Dashboard Help for more information.

Other Messages

- The card production application you use also may issue messages.
- Other printers can cause messages if more than one model of card printer is installed.

Respond to Messages

You can respond to printer messages using the printer front panel buttons.

Printer Messages

The following messages display on the printer LCD panel, on the Printer Dashboard,. Use the recovery instructions to respond to the message.

The messages that display are determined by the printer model and the options installed on the printer. The messages described in the following sections may not display on all printers.

Close and lock doors

A secure door is physically unlocked on the system.

1. Gently try to open all secure doors on the system.
2. Close any open door and lock the printer and/or embosser using the key.

100: Request not supported

The printer does not support the personalization being requested for the card. The card will be canceled.

Change the card data to match the printer's options and settings, or print to a printer that is configured to support the personalization being requested.

Press the USER button on the printer to clear the message.

101: Job could not complete

The card took too much time to complete.

The card will be canceled.

Press the USER button on the printer on the PC to clear the message.

102: Card not in position

The card is not positioned in the printer correctly.

1. Open the printer and remove the ribbon cartridge.
2. Turn the knob to remove the card.
3. Replace the ribbon cartridge and close the printer.

Press the USER button on the printer to clear the message.

103: Printer problem

The printer had an error. The card will be canceled.

1. Press the printer POWER button to power off the printer.
2. Press the POWER button again to power on the printer.

104: Critical problem

The printer had a serious error. The card will be canceled.

1. Press the printer POWER button to power off the printer.
2. Request service.

The system must remain powered off.

105: Magstripe data error

The printer failed to verify that the correct magnetic stripe data was written on the card.

1. Make sure that you are using magnetic stripe cards that match the printer settings.
2. Make sure that the cards are placed in the printer correctly.

Press the USER button on the printer to clear the message.

HINTS & TIPS

- The card might have been turned the wrong way. A diagram inside the input hopper shows the correct orientation.
- The card might not have a magnetic stripe.

106: Magstripe data not found

The printer did not find magnetic stripe data on card.

1. Make sure that you are using magnetic stripe cards that match the printer settings.
2. Make sure that the cards are placed in the printer correctly.

Press the USER button on the printer to clear the message.

HINTS & TIPS

- The card might not match printer settings or the data sent.
- Ask the system administrator to verify that the card, the data, and the printer settings match.

107: Magstripe read data error

The printer failed to read the magnetic stripe data from the card. The card will be canceled.

1. Make sure that you are using magnetic stripe cards that match the printer settings.
2. Make sure that the cards are placed in the printer correctly.

Press the USER button on the printer to send a new card to the printer.

HINTS & TIPS

- The data might use a different format than the current printer setting.
- Ask the system administrator to verify that the card, data, and printer settings match.

108: Magstripe read no data

The printer did not find any magnetic stripe data on card. The card will be canceled.

1. Make sure that you are using magnetic stripe cards that match the printer settings.
2. Make sure that the cards are placed in the printer correctly.

Press the USER button on the printer to send a new card to the printer.

HINTS & TIPS

- The card might have been turned the wrong way. A diagram inside the input hopper shows the correct orientation.
- The card might not have a magnetic stripe.

109: Print ribbon problem

The print ribbon is not moving properly.

1. Open the printer and remove the ribbon cartridge.
2. Reposition, repair, or replace the ribbon and advance the repaired area one full turn.
3. Replace the ribbon cartridge and close the printer.

Press the USER button on the printer to clear the message and send a new card to the printer.

HINTS & TIPS

- Remove any debris from the print area.
- If a card is in the printer, turn the manual advance knob to move the card so that the printer can eject it.

110: Print ribbon out or missing

The printer does not have usable ribbon. To complete the current card:

1. Open the printer and remove the ribbon cartridge.
2. Install a new ribbon and cleaning roller.
3. Replace the cartridge and close the printer.

Press the USER button on the printer to clear the message.

HINTS & TIPS

Used ribbon has negative images of printed data. To keep the data confidential, follow your company policy to discard used ribbon.

111: Card not picked

The printer did not pick a card. To complete the current card, open the input hopper, add or reposition the cards, and close the hopper.

Press the USER button on the printer to clear the message.

112: Card hopper empty

The printer did not detect cards in the input hopper.

Add cards to the input hopper.

Press the USER button on the printer to clear the message.

113: Close cover to continue

The printer cover is open. Close the cover to continue.

Press the USER button on the printer to clear the message.

HINTS & TIPS

- Make sure that the ribbon cartridge is installed properly with the cartridge handle even with the edges of the printer.
- Press down on the cover ridges to make sure that the cover latches completely on both sides.
- All access doors must be closed to process cards. Unlock, open, and close all printer doors to make sure they are closed completely.
- Lock the system.

114: Cover opened during job

The printer cover was opened while printing.

Push down on the cover to latch it.

Press the USER button on the printer to clear the message.

HINTS & TIPS

- Make sure that the ribbon cartridge is installed properly with the handle even with the edges of the printer.
- Press down on the cover ridges to make sure that the cover latches completely on both sides.
- All access doors must be closed to process cards. Unlock, open, and close all printer doors to make sure they are closed completely.
- Lock the system.

116: Magstripe not available

The printer does not have a magnetic stripe option. The card will be canceled.

Remove magnetic stripe data from the card or use a printer that has a magnetic stripe option installed.

Press the USER button on the printer to clear the message.

HINTS & TIPS

- Look at the printer configuration label inside the printer. If the label shows either “M” or “J”, the system has a magnetic stripe option that is not working. Request service.
- To process the card without magnetic stripe processing, remove the magnetic stripe data from the card design and send it again.

  To remove magnetic stripe data, you or your system administrator may need to clear a check box in the card production application.

117: Reader not available

The printer does not support the personalization being requested for the card. The card will be canceled.

Change the card data to match the printer’s options and settings or print to a printer that is configured to support the personalization being requested.

Press the USER button on the printer to clear the message.

HINTS & TIPS

To remove the reader request, you or your system administrator may need to clear a check box in the card production application.

118: Print ribbon type problem

The printer cannot use the ribbon installed. The card will be canceled.

Use ribbon designed for this printer.

Press the USER button on the printer to clear the message.

HINTS & TIPS

- Purchase ribbon from your dealer or authorized reseller.
- Use the Printer Dashboard to update the printer firmware, which may add support for new ribbon types.

119: Print ribbon not supported

The printer cannot use the ribbon installed. The card will be canceled.

Press the USER button on the printer to clear the message.

HINTS & TIPS

- Purchase ribbon from your dealer or authorized reseller.
- Use the Printer Dashboard to update the printer firmware, which may add support for new ribbon types.

120: User paused the printer

The printer was paused while printing.

To complete the current card press the printer's USER button.

HINTS & TIPS

If the user pressed the USER button for several seconds, the card has been canceled.

121: Print ribbon not identified

The printer cannot use the ribbon installed. The card will be canceled.

Use ribbon designed for this printer.

Press the USER button on the printer to clear the message.

HINTS & TIPS

Ask your dealer or authorized reseller for a replacement ribbon.

122: Magstripe format problem

The magnetic stripe data sent does not match the format set in the printer. The card will be canceled.

Press the User button on the printer to clear the message.

123: Insert new card side 1 up

1. Insert a new card in the printer with side 1 facing up.
2. If the card is not immediately picked, press the printer's USER button.

124: Insert same card side 2 up

1. Take the card from the printer.
2. Turn the card over end to end so side 2 is facing up.
3. Insert the card in the printer.
4. If the card is not immediately picked, press the printer's USER button.

149: Option not installed

The printer does not support the personalization being requested for the card. The card will be canceled.

Change the card data to match the printer's options and settings, or print to a printer that is configured to support the personalization being requested.

Press the User button on the printer to clear the message.

HINTS & TIPS

In the card format, don't include references to hardware that cannot be accessed by the system. For more information, refer to your ID software documentation or ask your system administrator.

150: Print while unlocked

The printer is unlocked. The card will be canceled.

Make sure that all access doors are closed securely and locked.

151: Failed to lock

An attempt to lock the printer failed. The card will be canceled.

1. Make sure that all access doors are closed securely.
2. Try locking the printer again.

HINTS & TIPS

Make sure that the reject tray is installed properly before locking the printer.

152: Insert new card side 2 up

1. Turn a new card over end to end so side 2 is facing up.
2. Insert the card in the printer.
3. If the card is not immediately picked, press the printer's USER button.

153: Insert same card side 2 up

1. Take the card from the printer and turn it over end to end so side 2 is facing up.
2. Insert the card in the printer.
3. If the card is not immediately picked, press the printer's USER button.

170: Insert new card side 1 up

1. Insert a new card in the printer with side 1 facing up.
2. If the card is not immediately picked, press the printer's USER button.

171: Insert same card side 1 up

1. Take the card from the printer and turn it over end to end so side 1 is facing up.
2. Insert the card in the printer.
3. If the card is not immediately picked, press the printer's USER button.

172: Insert cleaning card

1. Insert cleaning card.
2. If the card is not immediately picked, press the printer's USER button.

173: Improper shutdown

Always use the power button to power off the printer.

Press and hold the USER button to set the printer to **Ready**.

245: Configuration error

The configuration is not compatible with the printer model. The printer cannot print cards until the configuration issue is corrected. Contact your service provider for assistance.

275: Multi-hopper error

The multi-hopper has encountered a critical error. The card will be canceled.

1. Press the printer POWER button to power off the printer.
2. Press the POWER button again to power on the printer.

If the error occurs again, request service.

Click **OK** in the Card Printer Driver message to clear the message.

276: Multi-hopper card jam

The multi-hopper did not move a card into the printer.

Press the USER button to clear the error. If a card was jammed, it is moved to the reject tray.

Click **Retry**, or click **Cancel** to cancel the card, in the Card Printer Driver message.

277: Multi-hopper pick error

The multi-hopper did not pick a card from the input hopper cartridge.

1. Unlock the multi-hopper.
2. Remove each cartridge and make sure that cards are loaded properly.
3. Make sure that the cartridges are installed correctly.
4. Check the exception slide.
5. Lock the multi-hopper.

Press the USER button to clear the error.

Click **Retry**, or click **Cancel** to cancel the card, in the Card Printer Driver message.

294: Cleaning required

The printer's configured cleaning count has been reached. Clean the printer to continue printing.

295: Settings error

One or more settings could not be updated. Update the setting values and try the update again.

297: Option tag error

The option tag update has encountered an error. Reposition the instruction card and try the update again.

If the update fails again, it may not be supported by the printer, the function may already be enabled, or it is not authorized. Contact your service provider for assistance.

298: Option tag success

The option tag update completed successfully. Restart the printer to allow the change to take effect. If you are adding multiple updates, you do not have to restart the printer until all have completed successfully.

299: Image error

The image selected for the initialization screen cannot be used. Use a black/white image size of 256x64x1.

300: CardNotPrinterDispensed

The card dispensed by the kiosk was not taken by the user in the allotted time. The card was been rejected.

Click **OK** in the Card Printer Driver message.

310: KioskCardLost

The card has been lost in the kiosk. Either the card was not hand fed into the kiosk successfully or a card was removed after a reject initiated.

Click **OK** in the Card Printer Driver message.

323: Insert cleaning card

1. Insert cleaning card into exception slot of multihopper.
2. If the card is not immediately picked, press the printer's user button or click OK.

329: Multi-hopper eject error

The multi-hopper failed to eject a card.

1. Remove the output hopper and remove the card that failed to eject, if present.
2. Remove all cards from the output hopper.

346: IIDaaS ribbon in IFI printer

The IIDaaS print ribbon installed is not intended for use in this printer model. Replace the print ribbon with an IFI compatible ribbon type.

Press the User button to continue.

347: Certificate error

The certificate could not be loaded onto the printer. Correct the certificate and try again.

348: Generate CSR error

The certificate signing request could not be completed. Restart the printer and try again.

349: Printhead disconnected

No printhead was detected. Power down the printer and contact service.

350: Remove print ribbon

Remove the print ribbon.

1. Open the printer and remove the ribbon cartridge.
2. Close the printer.
3. Press the user button to continue.