Installation and Administrator's Guide

Entrust® Datacard® (formerly Artista®)
CR805 Retransfer ID Card Printer

August 2026

527694-001, Rev. K

Notice

Please do not attempt to operate or repair this equipment without adequate training. Any use, operation or repair you perform that is not in accordance with the information contained in this documentation is at your own risk.

Trademark Acknowledgments

Entrust, Artista and the hexagon design are trademarks, registered trademarks and/or service marks of the Entrust Corporation in the United States and other countries.

Datacard is a registered trademark and service mark of Entrust Corporation in the United States and other countries.

MasterCard is a registered trademark of MasterCard International Incorporated.

Visa is a registered trademark of Visa International Service Association.

All other product names are the property of their respective owners.

Proprietary Notice

The design and information contained in these materials are protected by US and international copyright laws.

All drawings and information herein are the property of Entrust Corporation. All unauthorized use and reproduction is prohibited.

Entrust Corporation
1187 Park Place
Minneapolis, MN 55379
Phone: 952-933-1223
Fax: 952-933-7971
www.entrust.com

© 2016-2026 Entrust Corporation. All rights reserved.

Revision Log

Revision	Date	Description of Changes
01	May 2016	Beta release of this document.
A	November 2016	First release of this document.
B	August 2017	Added new cleaning procedures and laminator support.
C	September 2017	Added multi-hopper support.
D	July 2018	Added modular single hopper support and general updates.
E	March 2019	Updated the printer cleaning instructions.
F	July 2020	Removed the modular single hopper and the Compliance information, updated printer cleaning information, and added primerless ribbon and tactile impression module support.
G	April 2021	Updated document branding.
H	April 2024	Added certificate management topics to the document.
J	July 2026	Updated document for Datacard branding.
K	August 2026	Updated for features added in D4.x4.1.

Contents

Chapter 1: Printer Installation 1
- **PC Requirements** 1
- **Ethernet Requirements** 2
- **USB Requirements** 2
- **Electrical Requirements** 2
- **Site Requirements** 3
  - Printer Dimensions 3
    - Single-Hopper Printer 3
    - Multi-Hopper Printer 4
  - Clearance Requirements 5
    - Single-Hopper Printer 5
    - Multi-Hopper Printer 5
  - Operating Environment. 6
  - Storage Environment. 6
- **Secure Printing Requirements** 7
- **Install the Printer.** 8
  - Unpack the Printer 9
  - Secure the Printer (Optional) 10
    - Use the Optional Cable Lock. 10
    - Use the Bolt-Down Openings 11
- **Install the Multi-Hopper** 13
  - Unpack the Multi-Hopper 13
  - Prepare the Multi-Hopper 14
  - Assemble the Multi-Hopper Printer 15
- **Plug In and Power On the Printer** 16
- **Clean the Printer** 17
  - Single-Hopper Printer 18
  - Multi-Hopper Printer 18
  - Start the Cleaning Cycle. 19
- **Install Supplies.** 20
  - Install the Ink Ribbon 20
  - Install the Cleaning Sleeve. 22
  - Install the Retransfer Film. 23
  - Load Cards 25
    - Single-Hopper Printer 26
    - Multi-Hopper Printer 26
- **Install a Large Output Hopper** 27
- **Connect to the Printer.** 29
  - Connect Using a USB Cable 29
  - Connect Using a Network Cable 29

Set the Printer Network IP Address **30**
Use IPv4 Addressing 30
Set a Static IPv4 Address (Optional) 31
Use IPv6 Addressing. 33
Enable IPv6 34
Set a Manual IPv6 Address (Optional) 35
Test the IP Address Using a Local Network 38
Print a Test Card **41**
Set Up Network Access. **42**
Verify Network Communication. **42**
Use the Card Printer Driver **42**
Connecting to an Enterprise Network. **43**
Connecting to an Authenticated Enterprise Network 43
Preparing your Printer for Authenticated Network Access. 43
Username/Password Authentication 43
Username/Password Authentication for wired Ethernet 43
Username/Password Authentication for Enterprise Wi-Fi. 44
Certificate Authentication 45
Certificate Authentication for wired Ethernet. 45
Certificate Authentication for Enterprise Wi-Fi 46
Adding a TLS Certificate. **47**
Certificate with Private Key Workflow 48
CSR Workflow 52

Chapter 2: Elements of Card Design **57**
Basic Card Design **57**
Printing Design. **58**
Color Printing 58
Color Management 60
Print Text in Color 60
Print Graphics in Color. 60
Monochrome Printing. 61
Monochrome Printing with Full-Color Ribbon 61
Print Text in Monochrome 61
Print Bar Codes. 62
Bar Code Guidelines 62
Test Bar Codes 63
Card Design Changes That Affect Bar Codes 63
Print Bar Codes with the Card Printer Driver 63
Apply a Second Layer of Retransfer Film 64
Non-Printing Areas 65
Standard Magnetic Stripe Non-Printing Area 66
Standard Smart Card Non-Printing Area. 66
Custom Non-Printing Areas. 66

Card Layout . . . 68
Image Size . . . 68
Backgrounds . . . 69
Image Placement . . . 69
Magnetic Stripe Design . . . 70
Magnetic Stripe Data Formats . . . 70
Three-Track Option (ISO/IAT) . . . 70
Single-Track Option (JIS) . . . 71
Magnetic Stripe Coercivity . . . 73
Smart Card Processing . . . 73
Smart Card Processing Requirements . . . 73
Smart Card Codes on the Printer Labels . . . 74
Single-Wire Smart Card . . . 74
Settings for Card Design in Printer Manager . . . 75

Chapter 3: Printer Manager . . . 77
Printer Manager . . . 77
Printer Manager User Access Levels . . . 78
WebUser . . . 78
WebAdmin . . . 78
WebService . . . 78
Access Printer Manager . . . 79
Printer Manager Settings . . . 81
Print a Printer Manager Page . . . 81
Use Printer Manager . . . 81
Status Menu . . . 82
Printer Setting Menu . . . 84
Communication . . . 89
ActivityLog . . . 93
Behavior . . . 95
VitalProductData . . . 98
FrontPanel . . . 99
Print . . . 100
Pick . . . 102
Transport . . . 103
VertTransport . . . 103
Flipper . . . 104
BarcodeReader . . . 105
HeatRoller . . . 106
Retransfer . . . 107
Debower . . . 110
SmartCard . . . 110
MagStripeGeneral . . . 111
MagStripeCustomTrack 1–3 . . . 113
CleaningCard . . . 116

Laminator . . . 116
LaminateType . . . 124
Multihopper . . . 127
Impresser . . . 128
Manufacturing . . . 130
WifiNetworkStationSetup . . . 130
WifiModes . . . 132
Update Password . . . 133
Certificates . . . 134
Set Job Queue State . . . 135
TroubleShooting Menu . . . 137
SSA Test . . . 138
Activity Log . . . 138
Reset Log . . . 138
Reset Counters . . . 139
Printer Reset . . . 139
Maintenance Menu . . . 140
Cleaning . . . 140
Updates . . . 142
Log Out Menu . . . 142

Chapter 4: Supplies and Parts . . . 143
Printer Supplies . . . 144
Ink Ribbon . . . 144
Retransfer Film . . . 145
Supply Storage Guidelines . . . 146
Cards . . . 147
Card Size . . . 147
Card Material . . . 147
Card Surface Finish . . . 147
Card Irregularities . . . 147
Card Die Cutting . . . 148
Card Handling . . . 148
Card Storage . . . 149
Cleaning Supplies . . . 149
Replacement Parts . . . 151
Ink Ribbon Cartridge . . . 151
Retransfer Film Cartridge . . . 151
Cleaning Spindle . . . 151
Optional Equipment . . . 151
Large Output Hopper . . . 151
Cable Lock . . . 151

Cables and Power Supplies **152**
Data Cables 152
USB Cable 152
Network Cable 152
Smart Card/Bar Code USB Cable 152
Printer Power Supply 152
Power Cords 153

Appendix A: CR805 Card Printer with Inline Lamination Module **A-1**
About the Laminator System **A-1**
Site Requirements **A-2**
System Dimensions A-2
Single-Hopper System A-2
Multi-Hopper System A-3
Clearance Requirements A-4
Single-Hopper System A-4
Multi-Hopper System A-5
Electrical Requirements **A-5**
Unpack the Laminator **A-6**
Secure the Laminator **A-7**
Use the Laminator Bolt-Down Openings A-7
Use the Laminator Cable Lock A-9
Assemble the Printer and Laminator **A-10**
Connect the Power Cords **A-11**
Connect the System to a PC **A-12**
Connect a USB Cable A-12
Connect a Network Cable A-12
Load Laminator Overlay Material **A-13**
Power On the System **A-15**
Print a Test Card **A-15**
Use the Printer LCD Panel A-15
Use the Card Printer Driver A-15
Verify the Test Card A-16
Laminator Supplies **A-17**
Overlay Storage Guidelines A-18
Laminator Replacement Parts **A-19**
Laminator Cartridges A-19
Impresser Die A-19
Laminator Power Supplies A-19
Power Cords A-19

Chapter 1: Printer Installation

1

This chapter describes system requirements and provides setup instructions for the Entrust® Datacard® (formerly Artista®) CR805 Retransfer ID Card Printer.

Your installation may have additional requirements for a card production environment. Consult your system administrator to determine the optimum location for card production.

For Card Printer Driver installation troubleshooting and card production troubleshooting information, refer to the *XPS Card Printer Driver User's Guide* and the printer's *User's Guide*.

PC Requirements

Use a PC that meets or exceeds the following:

- A 32- or 64-bit processor, running at 2 GHz or faster.
- 4 GB or more memory (RAM) and at least 1 GB free space on the hard drive.
- One of the following operating systems:
  - Windows 10, 32- or 64-bit
  - Windows 8.1, 32- or 64-bit
  - Windows 7, 32- or 64-bit
  - Windows Server 2016
  - Windows Server 2012, R2, 64-bit
  - Windows Server 2008, 64-bit
- A USB 2.0 or an Ethernet network connection. The printer can use only one connection type at the same time.
- ID software or other software to design the card and organize the data to print on each card.

Ethernet Requirements

You can connect many network printers to one PC. The maximum number of printers depends on the capacity of the network to deliver data to the printer.

The following components are required to install a printer on a network:

- An Ethernet network that uses the TCP/IP protocol and can run at one of the following: 1Gbase-T (1 gigabyte per second) or 100base-T (100 megabits per second).
- An Ethernet cable to connect the printer to the network. An Ethernet cable is not supplied with the printer.
- A PC that meets the "PC Requirements" on page 1, and is connected to, and communicating with, the network.

USB Requirements

You can connect up to eight card printers to a PC using USB cables.

To install a printer using a USB connection, the following components are required:

- A high-speed USB port. USB 2.0 is required.
- A USB cable to connect the printer to the PC. A USB cable is supplied with the printer.
- A PC that meets the "PC Requirements" on page 1.

If you need to connect two card printers to a PC with one USB port, use a single, independently powered USB hub to which you can connect both printers.

Electrical Requirements

The power supply detects the input voltage and works within the range stated.

	Electrical Requirements	
Printer Model	**Input**	**Output**
CR805	85–230VAC/47-63 Hz/ 1.2Amp	24V/6.6Amp/160W
CR805 with optional laminator	Refer to Appendix A: "CR805 Card Printer with Inline Lamination Module".	

Site Requirements

Set up and use the printer in an environment that meets the following requirements.

- Use a single-phase, 3-wire, grounded receptacle.
- Place the system and its supplies in a clean office environment, keeping paper and foreign materials off of the equipment.
- Place the printer on a sturdy, level surface.
- Place the printer away from direct sunlight.
- Do not place the printer near heating ducts, fans, or other air vents.
- Do not use the printer for purposes other than the intended use.
- Provide space for the printer and for clearance around the printer. The printer dimensions and clearance area are shown in the following sections.

Printer Dimensions

The external printer dimensions are shown in the following illustrations.

Single-Hopper Printer

Multi-Hopper Printer

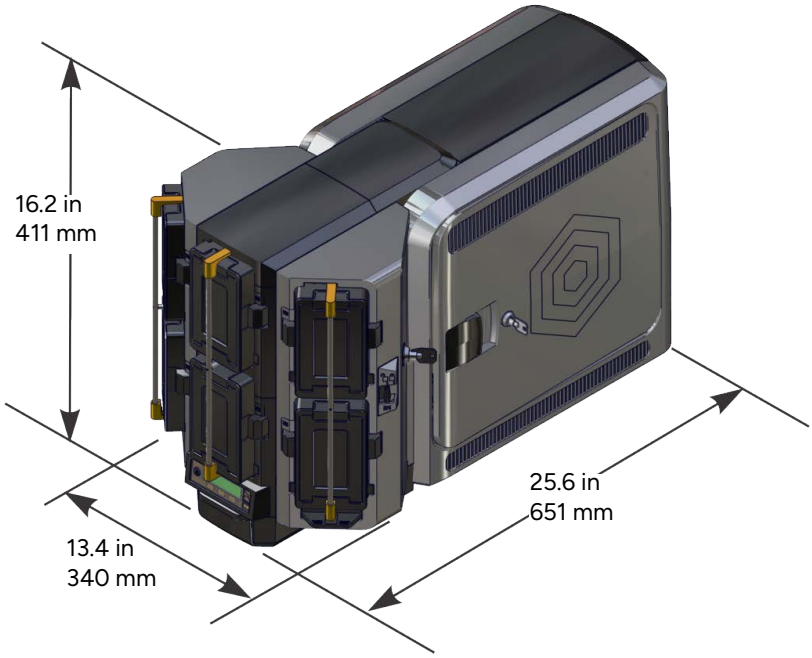

Clearance Requirements

The following measurements show the printer dimensions when the system access doors are open and the power cord is connected. We recommend that you provide at least 3 inches (76.2 mm) of additional clearance around the system to maintain access to the power cord and data cables, and to allow you to load and remove cards and supplies.

Single-Hopper Printer

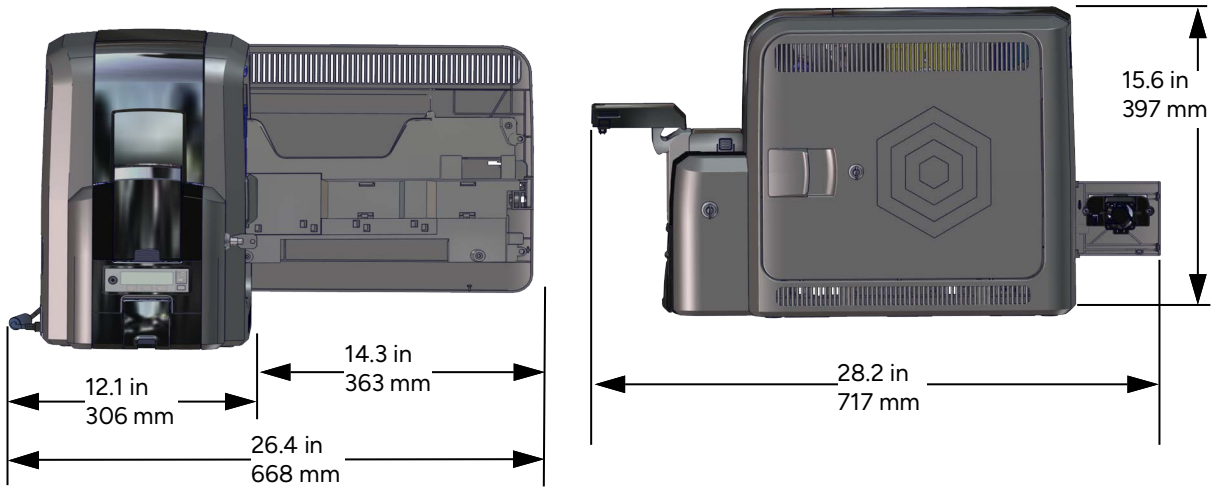

Options, such as a large output hopper, change the dimensions of the printer. Additional clearance is required when using these options.

Multi-Hopper Printer

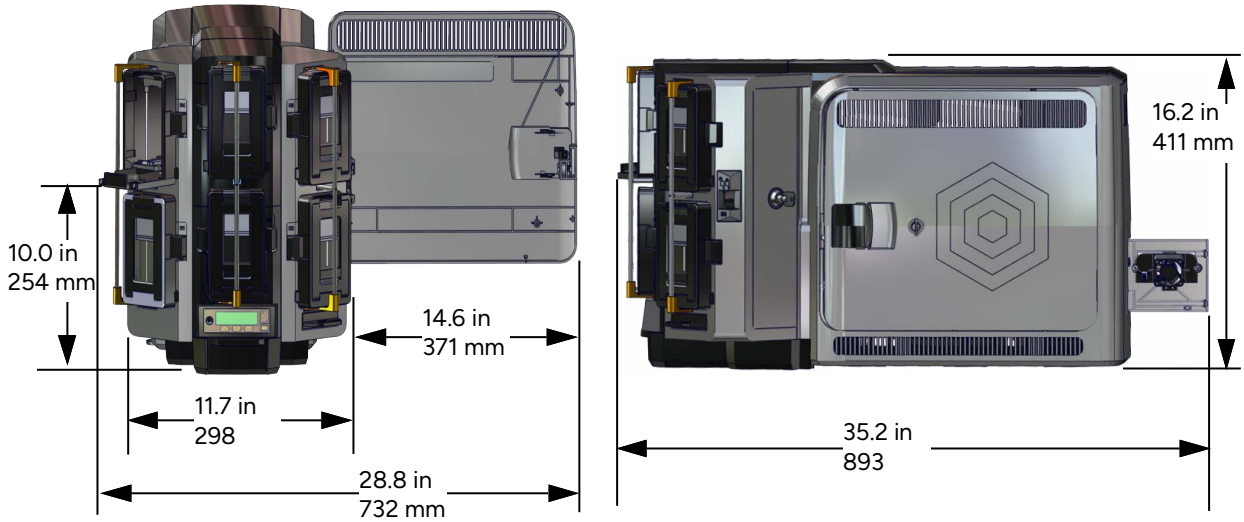

Operating Environment

Use the following guidelines when operating the printer:

Operating temperature	50° to 95°F (15° to 35°C)
Operating humidity	20% to 80% non-condensing

Using the printer in areas that are cooler than the recommended temperatures can cause retransfer errors. Using the printer in areas that are warmer than the recommended temperatures can cause cards to warp and retransfer film errors.

Storage Environment

If you are storing the printer for an extended length of time, remove the ink ribbon and retransfer film, and use the following storage guidelines:

Storage temperature	5° to 141°F (–15° to 60°C)
Storage humidity	10% to 90% non-condensing

Secure Printing Requirements

Secure printing requires keeping the printer firmware current and using TLS encryption for all card job commands and data sent to the printer. This will ensure card holder data is kept private as it travels across the network.

If your card production site requires secure printing, use an Entrust retransfer card printer with the TLSEncryptAllCardData setting enabled. This requires:

- Firmware version R4.14.1/R4.54.1 or newer to use the TLSEncryptAllCardData setting.

  The printer must be restarted after changing the TLSEncryptAllCardData setting for the change to take effect.

- A PC that meets the PC requirements listed in "PC Requirements" on page 1.
- An Ethernet or USB connection that meets the requirements listed in "Ethernet Requirements" or "USB Requirements" on page 2.
- A current browser.
- The current version of printer firmware. New firmware releases add patches for known security vulnerabilities.

If you use Entrust Adaptive Issuance™ Remote Monitoring and Management Software to manage your printers, you can disable the printer's native configuration interface, Printer Manager, by changing the **Behavior > WebServerSecure** setting to **Disabled**. This prevents unauthorized access to the printer and provides a higher level of security. Refer to "Behavior" on page 95.

Caution: Do not disable the WebServerSecure setting unless you use Remote Monitoring and Management software. You cannot re-enable Printer Manager to manage the printer if you do not use Remote Monitoring and Management software.

Install the Printer

The following sections describe the setup process when you first install the printer.

The printer ships with a standard 125-card input hopper. If you ordered the printer with an optional multi-hopper, the printer is manufactured without an input hopper. This allows you to install the multi-hopper with six input hoppers, each with a 125-card capacity.

An optional 125-card output hopper also is available and can be installed without tools on single-hopper printers.

The following sections show the printer with a single hopper. Printer option-specific information is noted, where necessary.

- Unpack the Printer on page 9
- Secure the Printer (Optional) on page 10
- Install the Multi-Hopper on page 13
- Plug In and Power On the Printer on page 16
- Clean the Printer on page 17
- Install Supplies on page 20
- Install a Large Output Hopper on page 27

Unpack the Printer

1. Remove the printer from the shipping carton. The accessories tray holds the printer power supply and power cord, the cleaning roller spindle, and the printer documentation.

   If the printer is ordered with the optional multi-hopper, the printer is shipped without an input hopper. The multi-hopper is shipped separately from the printer. Refer to "Install the Multi-Hopper" on page 13.

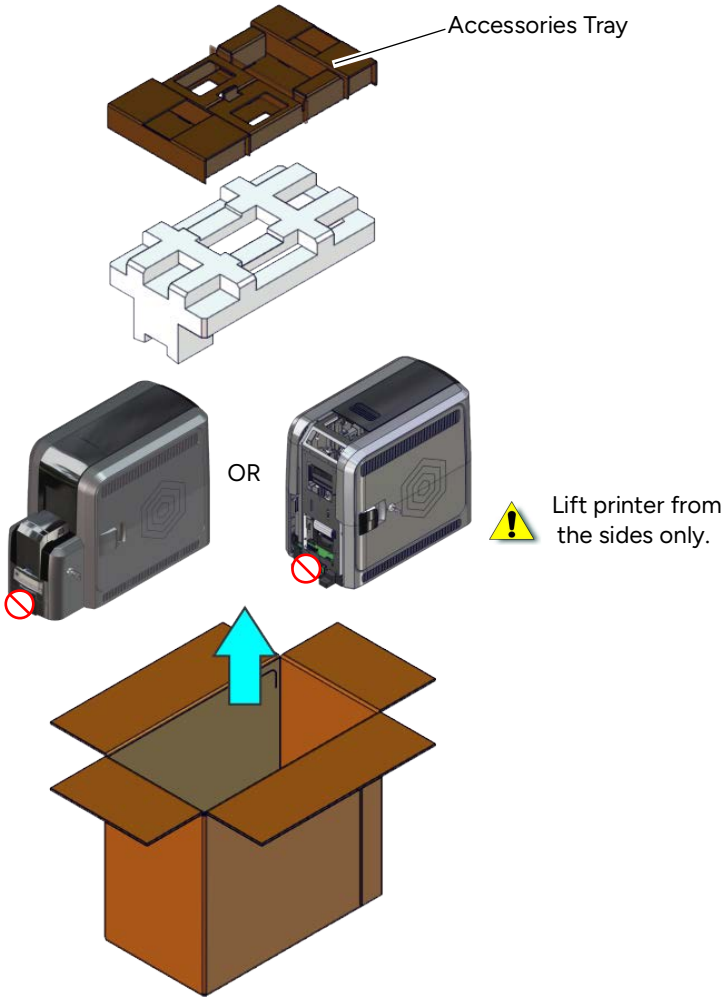

   Save the shipping cartons and packing materials. They are required if you need to store, move, or return the system for service.

2. Place the printer on the selected work surface. Make sure that the surface meets the requirements described in "Site Requirements" on page 3.

If your system includes the optional laminator, refer to "Unpack the Laminator" on page A-6 for information about how to prepare the laminator.

Secure the Printer (Optional)

This procedure is optional.

You can secure the printer using one of the following:

- An optional cable lock (refer to "Use the Optional Cable Lock").
- The bolt-down openings in the bottom of the printer (refer to "Use the Bolt-Down Openings" on page 11).

Use the Optional Cable Lock

The cable lock is a user-installed feature that does not require special tools to install. The package contains a cable lock, instructions, and a metal security plate. The security plate is installed in the printer and is designed to accommodate the T-bar of the cable lock.

- The cable lock is available with either a key or combination lock.
- If your system includes a laminator, the cable lock can be installed in the laminator component of the system. Refer to "Use the Laminator Cable Lock" on page A-9.

1. Prepare the printer by installing the metal security plate:
   a. Tip the printer on its right side.
   b. Locate the security plate receptacle on the underside of the printer toward the back left side.
   c. Insert the security plate into the receptacle with the open end toward the printer.
   d. Insert the T-bar of the cable lock through the printer opening into the security plate.
2. Follow the instructions included with the cable lock to complete the installation.

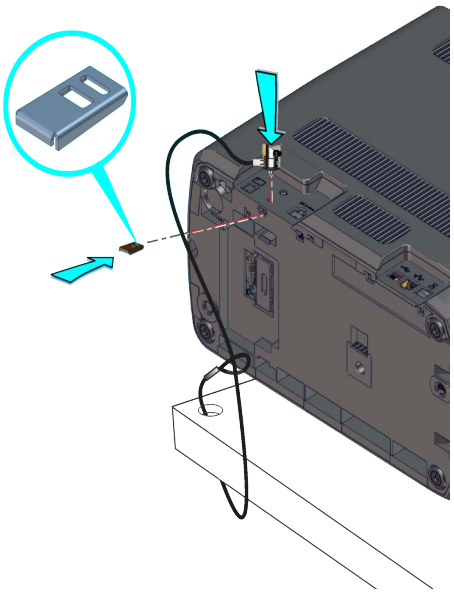

Use the Bolt-Down Openings

The printer includes bolt-down openings that you can use to secure it to a mounting surface.

You need the following supplies:

- The bolt-down kit (part no. 512969-001) contains two M6 well nuts.
- Two M6 (6 mm) screws, purchased separately.

  The length of the screws you need depends on the thickness of the mounting surface. The screw length is the surface thickness + 0.75 inch (20 mm).
- Two M6 washers, purchased separately.
- 1/4-inch (7 mm) drill bit.

1. Drill two holes in the mounting surface following the dimensions and requirements shown in the following figure:

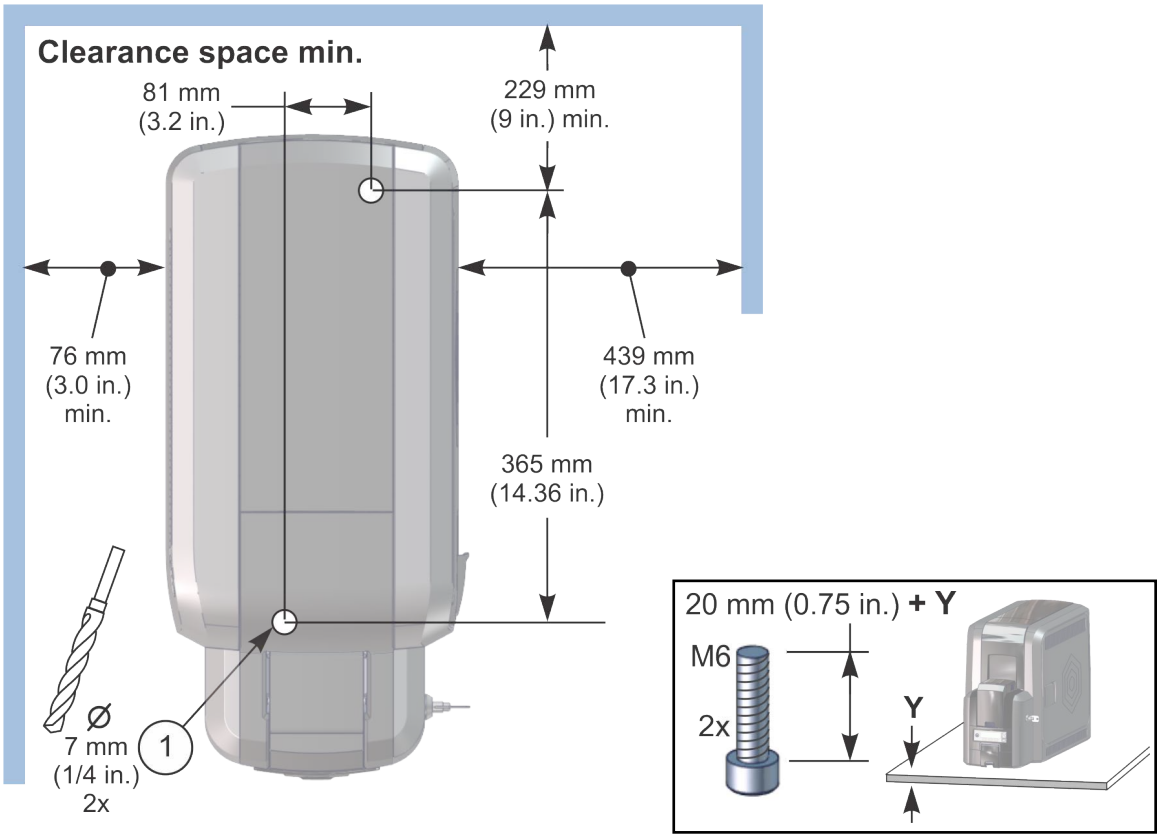

2. Carefully tip the printer onto its left side (the side without the access door).
3. Insert the M6 well nut threaded inserts into the bolt-down openings on the bottom of the printer.
4. Return the printer to its upright position and position it over the holes that are drilled in the mounting surface.
5. Secure the printer to the mounting surface.
   a. Place a flat washer on each of the screws beneath the mounting surface.
   b. Insert the M6 screws through the holes in the mounting surface and into the well nuts in the bottom of the printer.
   c. Tighten the screws securely.

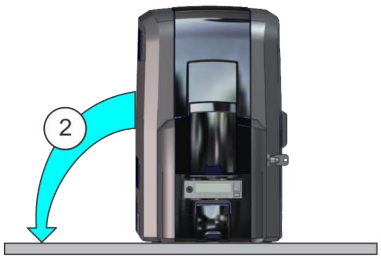

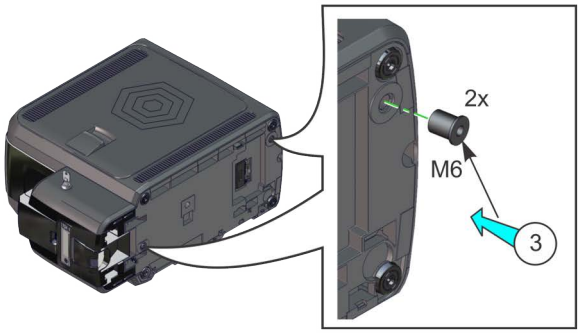

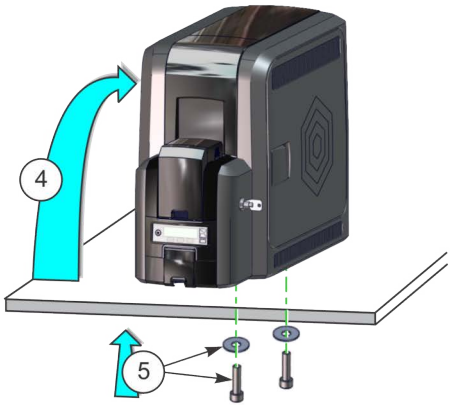

If your system includes the optional laminator, you can secure the laminator to a mounting surface. Refer to "Use the Laminator Bolt-Down Openings" on page A-7.

Install the Multi-Hopper

Use the following information if you purchased the optional multi-hopper.

Unpack the Multi-Hopper

1. Remove the multi-hopper from the shipping carton.

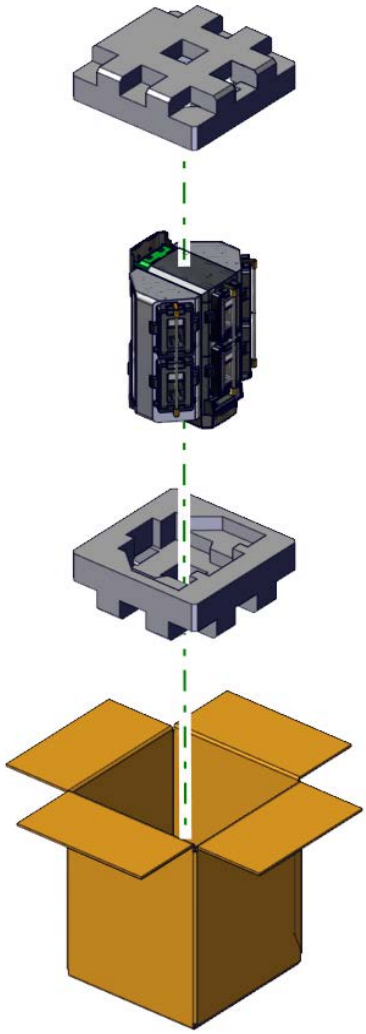

2. Continue with "Prepare the Multi-Hopper" on page 14.

Prepare the Multi-Hopper

The multi-hopper ships with the enclosure transition folded down with a restraining pin holding it in position. A second restraining pin is inserted into the bottom of the multi-hopper.

1. Pull the top restraining pin straight up from the multi-hopper to remove it from the enclosure transition. Pull the bottom pin straight down from the multi-hopper. The bottom pin includes a spacer.

   Save the restraining pins after removing them from the multi-hopper. They are required if you need to repackage and return the multi-hopper for service.

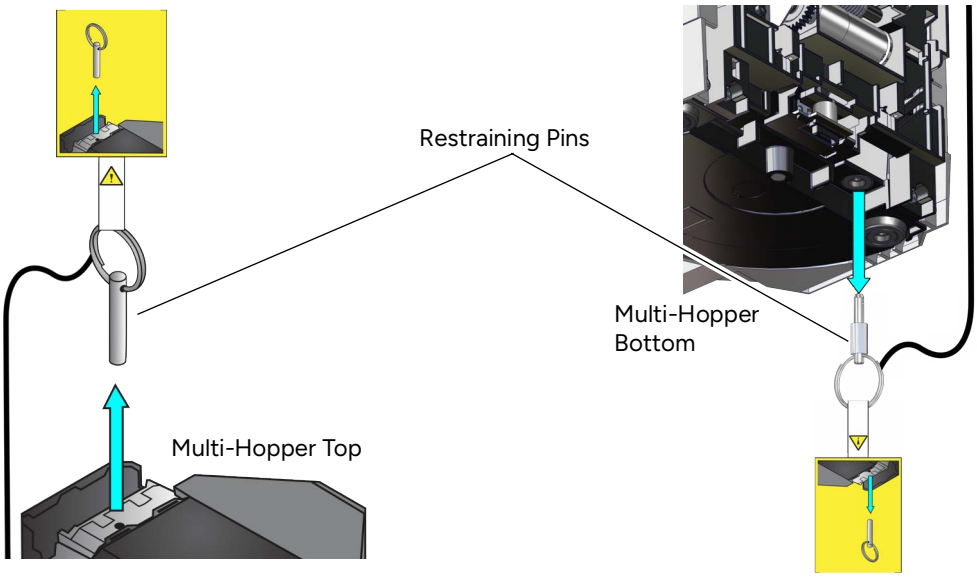

2. Rotate the enclosure transition 90° so that it aligns with the top of the multi-hopper.

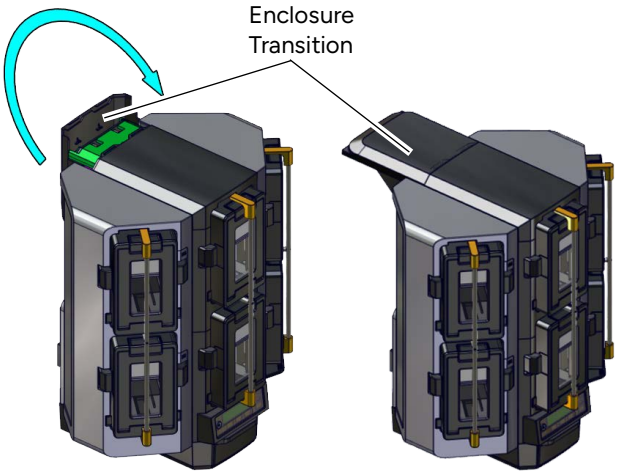

3. Continue with "Assemble the Multi-Hopper Printer" on page 15.

Assemble the Multi-Hopper Printer

1. Match the two large hooks on the back center of the multi-hopper with the two slots on the printer frame.

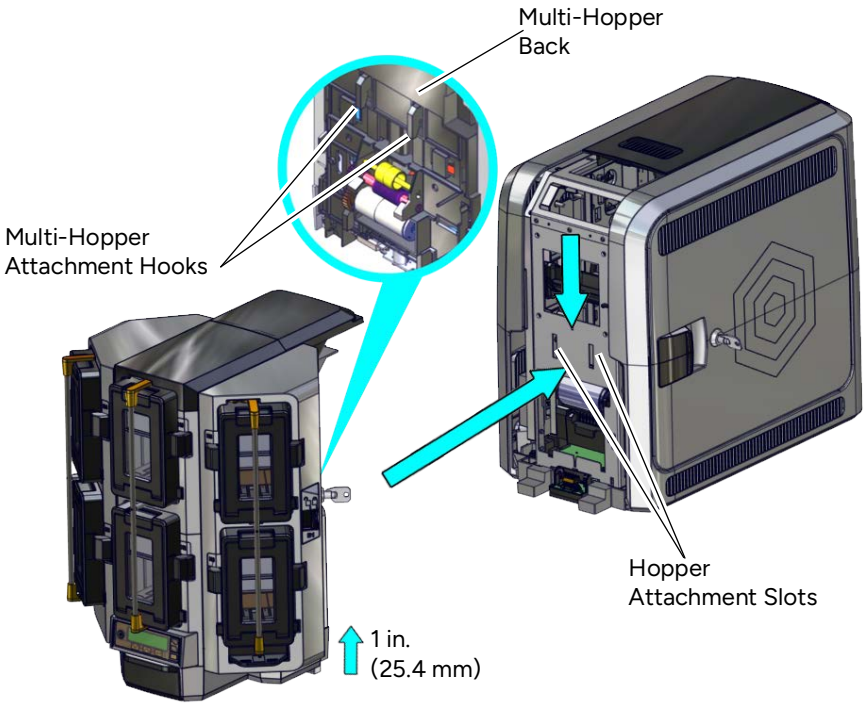

2. Lift the multi-hopper approximately one inch (25.4 mm) and push it in slightly to engage the hooks into the frame.
3. Push down to secure the multi-hopper to the printer.

Plug In and Power On the Printer

1. Connect the printer power supply to the printer. Then, connect the power cord to the power supply.

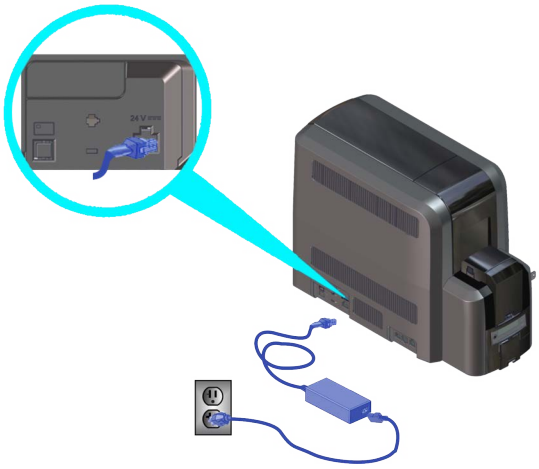

2. Plug the power supply cord into the facility power source.

The front panel of the printer provides the controls you need to operate the system. Refer to the printer's *User's Guide* for complete information about using the front panel.

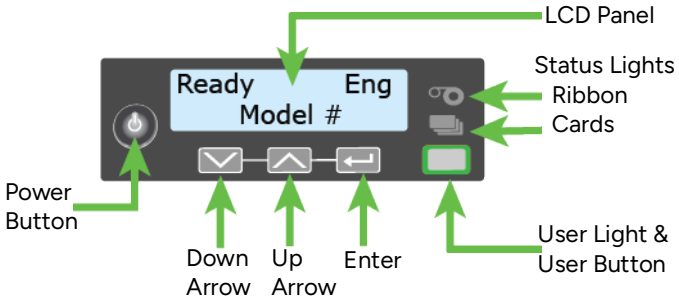

Press the POWER button on the front panel to power on the printer. The front panel LCD displays **Ready** when the printer is powered on.

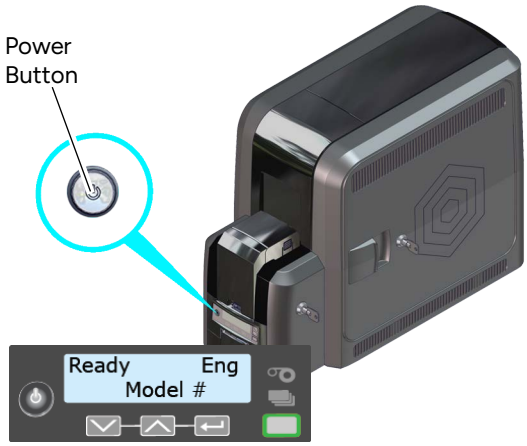

Clean the Printer

The first time you set up the printer, run an isopropanol cleaning card through the newly installed printer to remove any dust that might have collected during shipping or storage.

The printer ships with two types of cleaning cards:

- An isopropanol cleaning card, included in each ink ribbon package.
- A 10-pack of adhesive cleaning cards.

Refer to the cleaning schedule in the printer's *User's Guide* for information about when to use each type of cleaning card.

1. Open the ink ribbon container and remove the isopropanol cleaning card package.

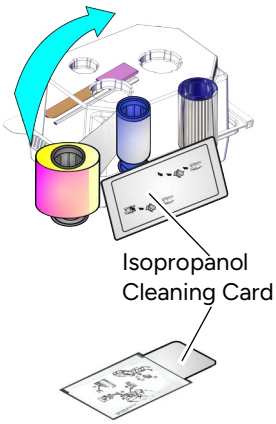

2. Open the isopropanol cleaning card package and remove the card.

   Clean the printer immediately. The cleaning card dries out if it is out of its package for more than a few minutes.

The cleaning card may become bowed slightly during shipment. If the card is bowed, insert the card into the printer as shown.

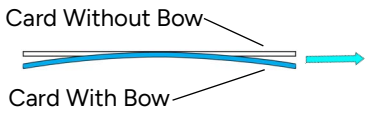

3. Continue with:
   - Single-Hopper Printer
   - Multi-Hopper Printer

Single-Hopper Printer

1. Power on the printer, if necessary.
2. Unlock the input hopper lock, if necessary.
3. Open the input hopper cover.
4. Insert the cleaning card into the input hopper.

   If the cleaning card appears bowed, insert it as shown.

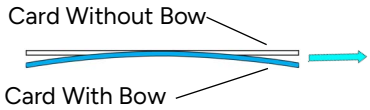

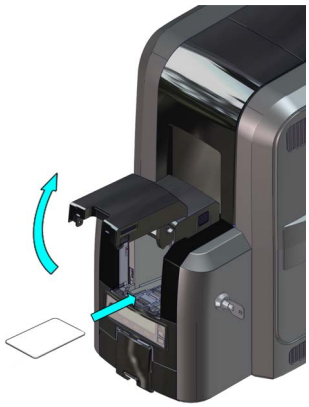

5. Close and lock the input hopper, if necessary.
6. Continue with "Start the Cleaning Cycle" on page 19.

Multi-Hopper Printer

1. Power on the printer, if necessary.
2. Pull out the multi-hopper exception slide and insert the cleaning card.

   If the cleaning card appears bowed, insert it as shown.

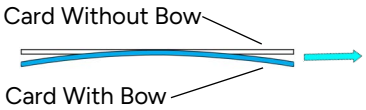

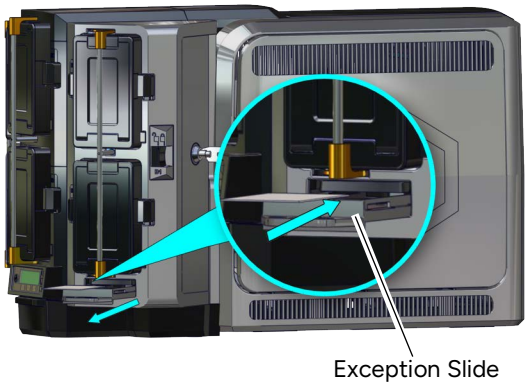

3. Push in the exception slide.
4. Continue with "Start the Cleaning Cycle" on page 19.

Start the Cleaning Cycle

Use the LCD menu system to start the cleaning cycle. Begin when the printer displays **Ready** and the USER button shows steady green.

The LCD panel may display additional prompts when cleaning a printer without locks. Follow the instructions on the panel to clean the printer.

1. Press the USER button.

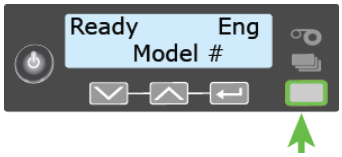

2. **Suspended** displays on line 1 of the LCD panel. Press ENTER to enter the menu system.

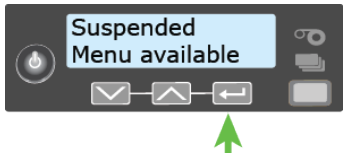

3. **Maintenance** displays on line 2 of the LCD panel. Press ENTER to enter the **Maintenance** menu.

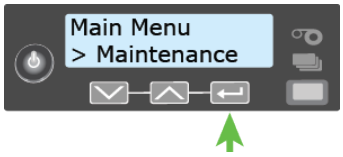

4. **Cleaning Card** displays on line 2 of the LCD panel. Press ENTER to enter the **Cleaning Card** menu.

5. **Isopropanol** displays on line 2 of the LCD panel. Press ENTER to select the isopropanol cleaning card.

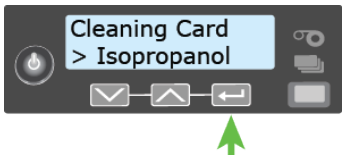

6. **Start** displays on line 2 of the LCD panel. Press ENTER to start the cleaning process.

7. **Insert cleaning card** displays on the LCD panel. Press the USER button to start the cleaning cycle.

   The printer moves the card through the printer several times. If the vertical option is installed, the card moves into the vertical area and cleans the rollers located there.

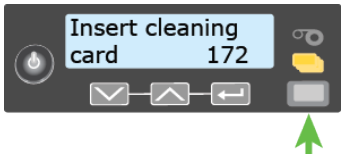

At the end of the cleaning cycle, the isopropanol cleaning card is ejected into the output hopper on a printer without locks, or into the printer reject tray (RT1) on a printer with locks.

When you clean a system with a laminator, the isopropanol cleaning card moves into the laminator after cleaning the printer and cleans the laminator rollers and card entry area. The cleaning card is ejected into the laminator output hopper or the laminator reject tray. If necessary, open the laminator to remove the cleaning card.

8. Open the printer access door and remove the used cleaning card.

Continue with "Install Supplies".

Install Supplies

To prepare the printer to print cards, install the ink ribbon and retransfer film on the appropriate cartridges, install a cleaning sleeve into the printer, and load blank card stock into the input hopper. The ink ribbon and retransfer cartridges are shipped inside the printer.

If your system includes the optional laminator, also load overlay material into the L1 and L2 (if equipped) laminators. Refer to "Load Laminator Overlay Material" on page A-13, for information about loading the laminator cartridges.

Install the Ink Ribbon

The printer uses the ink ribbon to print the card images onto the retransfer film. Do the following to load the ink ribbon.

1. Unlock the printer, if necessary, and open the printer access door.
2. Remove the ink ribbon cartridge from the printer.
3. Place the cartridge on a flat surface with the spindles facing up.

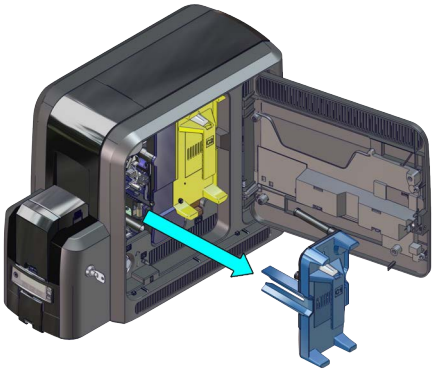

4. Open the ink ribbon package and remove the ink ribbon. Hold the ribbon cores and pull them up from the package base.

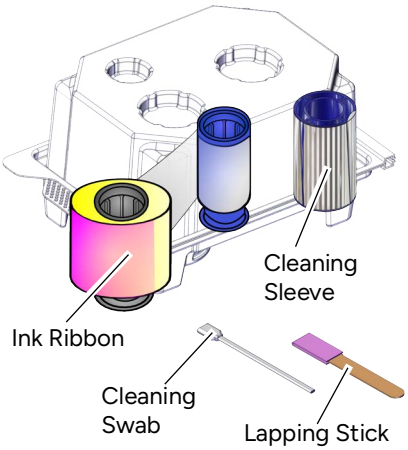

The ink ribbon package also includes the following:

- Cleaning sleeve. Refer to "Install the Cleaning Sleeve" on page 22
- Lapping stick and cleaning swab. Refer to the "Printer Cleaning Schedule" in the printer's *User's Guide* for complete information about when to use these items.

5. Install the ink ribbon.

   a. Slide the blue supply spool onto the cartridge until it clicks into place. The supply roll can go on only one way and fits only on the correct side of the cartridge.

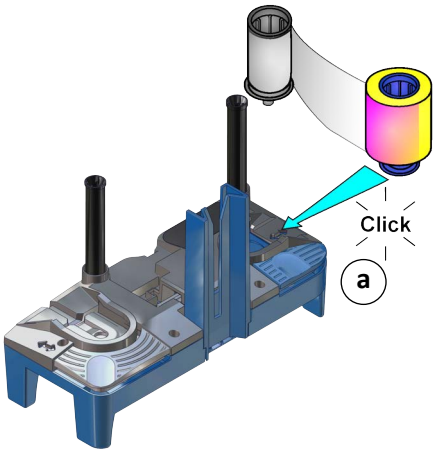

   b. Route the ink ribbon around the rollers on the cartridge. A diagram on the cartridge shows the correct routing pattern.

   c. Slide the empty silver take-up spool onto the cartridge until it clicks into place.

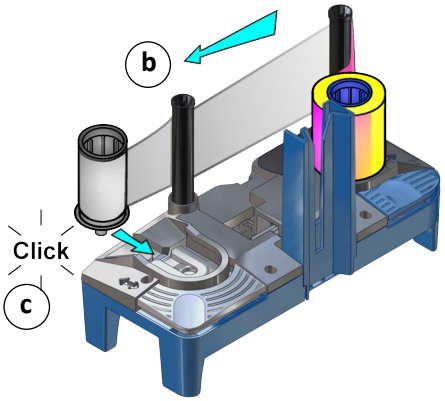

d. Turn the take-up spool clockwise just enough to take up any slack in the ribbon.

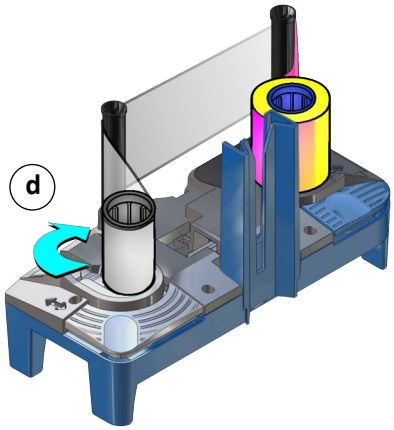

6. Continue with "Install the Cleaning Sleeve".

Install the Cleaning Sleeve

The cleaning sleeve helps maintain print quality by removing dust and other particles from cards before they travel into the printer. The cleaning sleeve fits on a spindle that is inserted into the printer. The printer ships with the cleaning spindle in the accessories box.

Replace the cleaning sleeve each time you install a new ink ribbon. You also should replace the cleaning sleeve if you notice debris on the printed cards or if the cleaning sleeve is no longer sticky.

1. Load the cleaning sleeve.

   a. Remove the cleaning spindle from the accessories box.

   b. Remove the cleaning sleeve from the ribbon package and slide the cleaning sleeve onto the cleaning spindle.

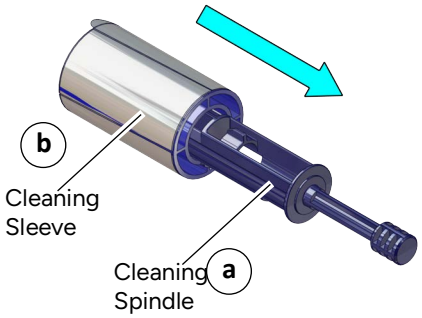

   c. Remove the protective wrapper from the cleaning sleeve.

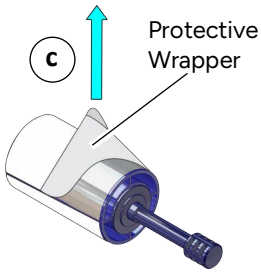

2. Insert the cleaning spindle into the C3 slot in the printer.

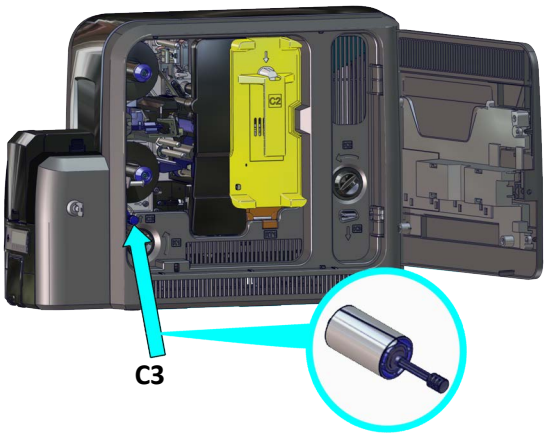

3. Replace the ink ribbon cartridge in the printer.
4. Continue with "Install the Retransfer Film".

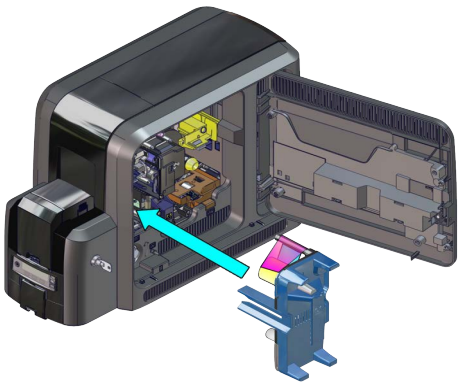

Install the Retransfer Film

The retransfer film contains the images printed with the ink ribbon. A heated roller then bonds the film onto the card. Do the following to load the retransfer film.

1. Remove the retransfer film cartridge from the printer.
2. Place the cartridge on a flat surface with the spindles facing up.

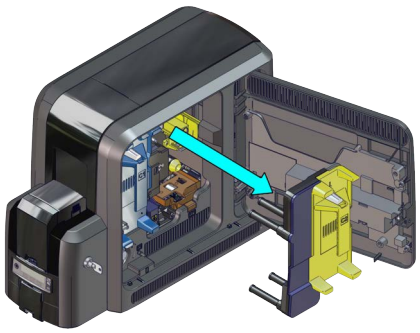

3. Remove the roll of retransfer film from its package. Hold the film cores and pull them up from the package base.

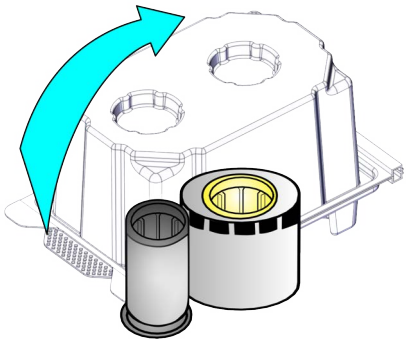

4. Install the retransfer film.

   a. Slide the yellow supply spool onto the cartridge until it clicks into place. The supply roll can go on only one way and fits only on the correct side of the cartridge.

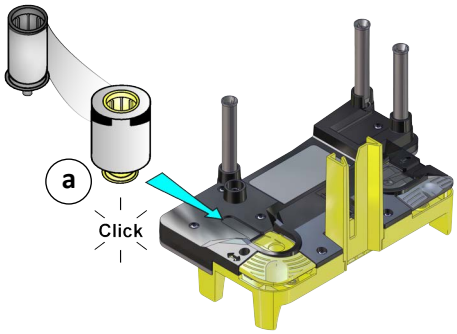

   b. Route the film around the rollers on the cartridge. A diagram on the cartridge shows the correct routing pattern.

   c. Slide the empty silver take-up spool onto the cartridge until it clicks into place.

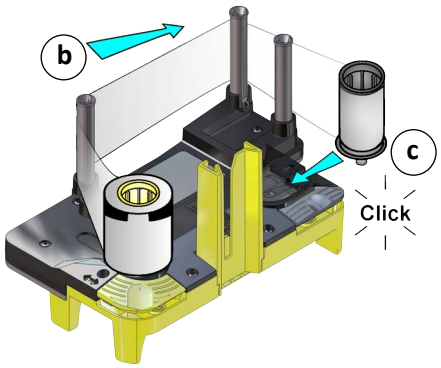

   d. Turn the take-up spool counterclockwise just enough to take up any slack in the film.

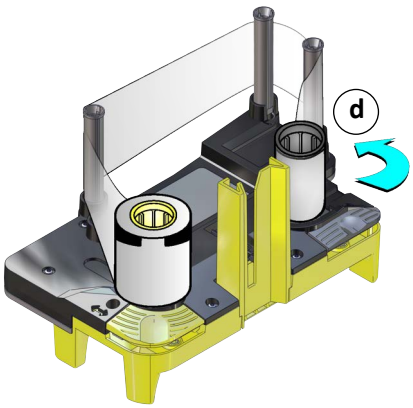

5. Replace the retransfer film cartridge in the printer.
6. Close the printer access door.
7. Continue with "Load Cards".

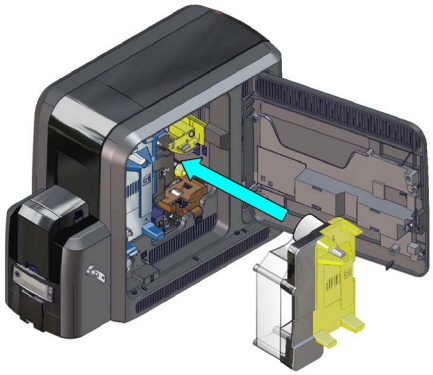

Load Cards

Do the following to load cards in the input hopper. If you plan to insert cards in the exception slot, make sure that blank cards are available near the printer.

- Handle cards by the edges only, or wear card inspection gloves approved by Entrust.
- Cards can stick together. Slide or fan the cards to separate the edges before placing them in the input hopper.
- Insert ISO magnetic stripe cards with the stripe (back side) facing down and to the right.
- Insert smart cards with the smart card chip facing up and toward the back of the hopper.

A diagram inside the input hopper shows the correct orientation for each type of card.

Refer to "Cards" on page 147 for more information about card stock and card handling guidelines.

Single-Hopper Printer

1. Open the input hopper door.
2. Load the cards into the input hopper. The hopper can hold up to 125 cards.
3. Close and lock the input hopper, if necessary.

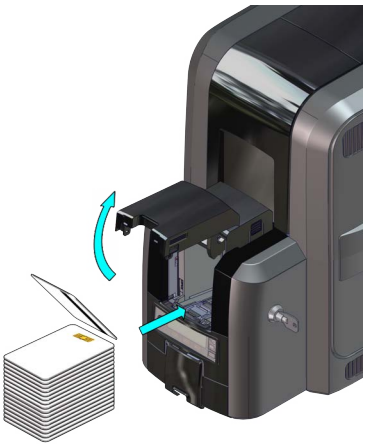

Multi-Hopper Printer

1. Unlock the multi-hopper lock.
2. Slide the lock bar release button (B1) to the left to release the hopper lock bars.
3. Rotate a lock bar to the left to provide access to the multi-hopper input cartridge that you want to load.

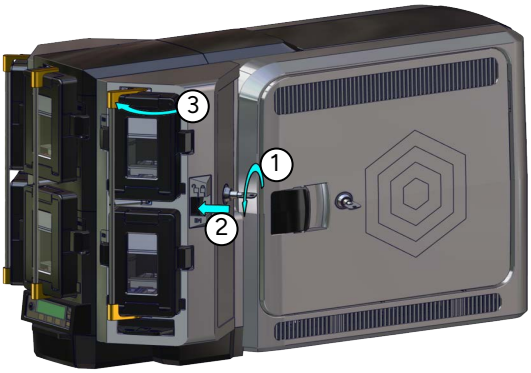

4. Press the cartridge release button at the top of the cartridge and open the cartridge door.
5. Lift the card weight to the top of the cartridge and gently pull it forward until it locks in position.
6. Load the cards into the input hopper cartridge. Handle the cards by the edges only, or wear card inspection gloves approved by Entrust.

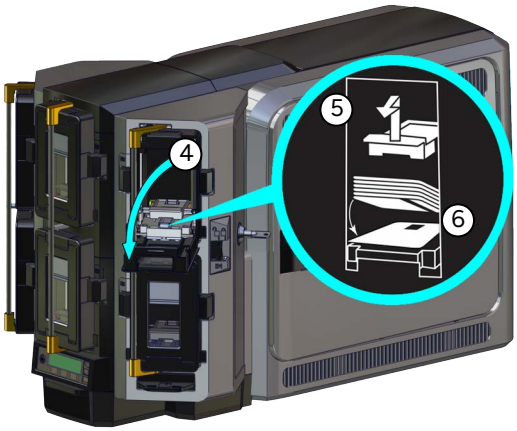

- The diagrams inside the cartridge show how to position the card weight and load cards. Do not place the cards on top of the card weight.
- You do not need to remove the cartridge from the multi-hopper to load cards.

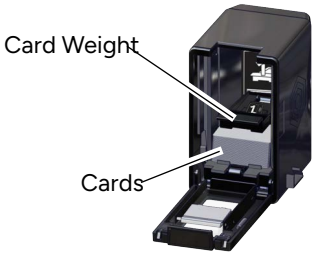

7. Close the cartridge door. This releases the card weight so that it is lowered on top of the cards.
8. Follow step 3 through step 7 to load cards into each input hopper cartridge.
9. Rotate all the lock bars back into position.
10. Slide the lock bar release button to the right to lock the lock bars into place.
11. Lock the multi-hopper.

Caution: The lock bars, lock bar release button, and the multi-hopper door lock all must be in the lock position for the printer to operate. If any of the locks are left in the unlock position, the printer issues an error. You must unlock and re-lock all locks to clear the error and place the printer in **Ready** status.

Install a Large Output Hopper

You can install an large output hopper on the printer, depending on your requirements.

The standard output hopper included with the printer holds approximately 25 0.030 in. (0.762 mm) cards. The printer also can be used with an optional large output hopper that holds up to 125 cards. The large output hopper consists of a 125-card replacement hopper and an extended pedestal base.

The large output hopper can be installed only on single-hopper printers.

Do the following to install the large output hopper.

1. Remove the standard output hopper from the printer.

   Pull the hopper straight out from the printer.

2. Place the printer on the extended pedestal base.
   Make sure that it is lined up correctly on the pedestal.

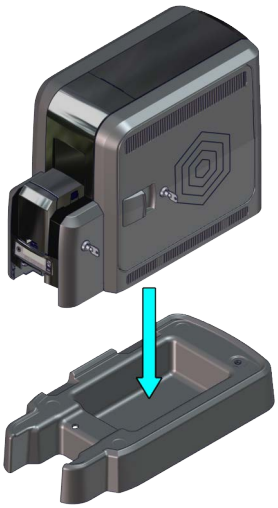

3. Insert the 125-card output hopper into the printer and pedestal until it clicks into place.
4. Follow the instructions included in the upgrade kit to complete the installation.

Connect to the Printer

You can connect to the printer from a Windows-based PC either directly through a USB cable, or through a network (an Ethernet cable is not supplied with the system).

Connect Using a USB Cable

Do not connect the USB cable to the computer until you are prompted during the driver installation.
Refer to the *XPS Card Printer Driver User's Guide* to set up the Card Printer Driver to work with the printer.

1. Connect one end of the USB cable to the USB port of the printer.
2. Connect the other end to a USB port on the PC when you are prompted during installation of the Card Printer Driver.

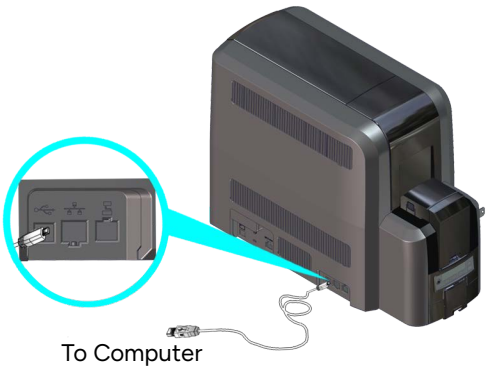

If you plan to use Entrust Instant ID (formerly TruCredential™) software with a USB-connected printer, you must install the Card Printer Driver to establish the initial communication path to the printer. Refer to the *XPS Card Printer Driver User's Guide* for complete information about installing the Card Printer Driver.

Connect Using a Network Cable

1. Connect one end of the Ethernet cable to the network connection port on the printer.
2. Connect the other end to a network port.
3. Refer to the *XPS Card Printer Driver User's Guide* to set up the Card Printer Driver to work with the printer.

Card Printers in Adaptive Issuance Instant Financial Issuance Software Setup Guide

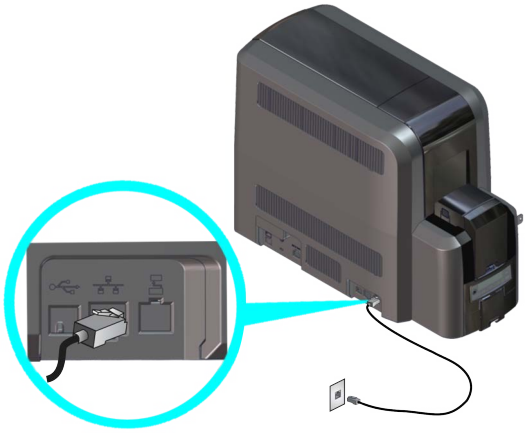

Set the Printer Network IP Address

The printer's IP address is used to access Printer Manager from a browser window. Instant Financial Issuance

To display either a USB or network IP address, you can do one of the following:

- Press the up or down arrow key on the front panel while the printer displays **Ready**.
- Use the LCD menu system Status menu. Refer to the printer's *User's Guide* for more information about using the Status menu to display the IP address.

The printer supports both IPv4 and IPv6 addressing. If your network environment uses IPv6, you may be required to use the LCD Configuration menu to enable the IPv6 settings that manage the printer communication over an Ethernet network. You do not need to make any configuration changes to use IPv4.

You also can use Printer Manager to change the communication method and define printer address information. Refer to "Communication" on page 89.

Use IPv4 Addressing

When you use IPv4, the printer can use either of the following network communication methods:

- **DHCP (Dynamic Host Configuration Protocol)**—The network automatically assigns the IP address to the printer. The IP address of a printer that uses DHCP can change if the printer is powered off and back on.
- **Static IP**—You set the IP address, subnet mask, and gateway address, as provided by your network support personnel. A static IP address does not change when the printer is powered off. Some sites may require that the printer has the same IP address at all times. Refer to "Set a Static IPv4 Address (Optional)".

Set a Static IPv4 Address (Optional)

The default communications method is DHCP (Dynamic Host Configuration Protocol). If you need to assign a static IP address, you can use the front panel to change the address method and enter the address information.

- You can set a static IP address on a printer even if it is not connected to the network. For example, a group may set static IP addresses on several printers in a central location before installing them at individual sites.
- When the printer is configured to use a static IP address, the printer's front panel displays the address even when the printer is not connected to a network. In addition, the LCD displays a "+" if the network is active, or a "-" if the network is inactive, as a prefix to the static IP address.

1. Obtain the following values from your network support personnel. Make sure you receive all three values:
   - IP address
   - Subnet mask
   - Gateway address
2. Enter the menu system.
   a. Press the USER button to suspend the printer.

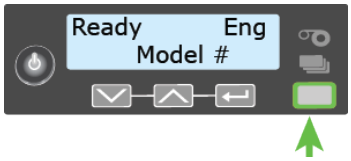

   b. Press ENTER to enter the menu system.

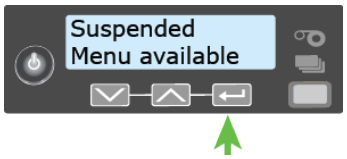

   c. Press the down arrow until **Configuration** displays on line 2.

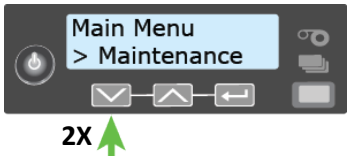

   d. Press ENTER to enter the **Configuration** menu.

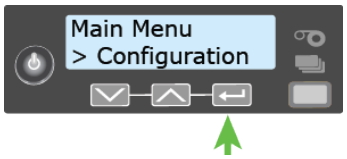

e. Press ENTER to enter the Network IPv4 menu. **DHCP/Static IP** displays on line 2.

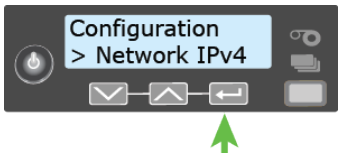

f. Press ENTER to select an address method.

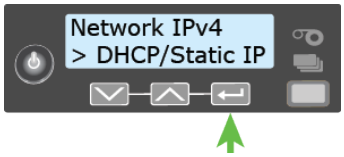

g. Press the up or down arrow to display **Static IP** on line 2.

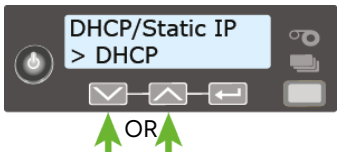

OR

h. Press ENTER to enter the **Static IP** menu.

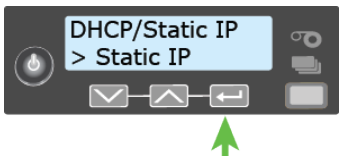

3. Set the static IP address, subnet mask, and gateway address.

   a. Press ENTER with **IP Address** on line 2 to set the static IP address.

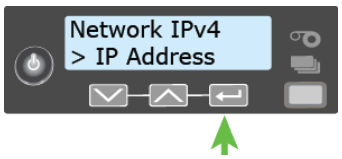

   The IP address has four sections, separated by periods. A cursor appears under the digit that will change.

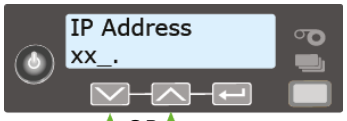

OR

   i. The address section shows three digits when it can be changed and the cursor is under the right-most digit. Use the arrow keys to change one digit at a time. Press ENTER to navigate to the next section of the address.

   ii. When all four sections are correct, press ENTER. The next section of the address entry (**Subnet Mask** or **Gateway Address**) displays on line 2 of the LCD panel.

b. Repeat step a, i through ii, to enter the subnet mask and gateway address.

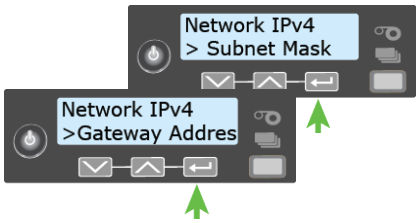

4. Press ENTER when you finish entering all the required address information. **Apply** displays on line 2.

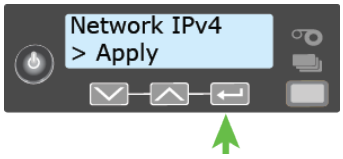

5. Press ENTER to apply your changes.
6. Press the down arrow key until **Exit** displays on line 2.
7. Press ENTER. Then, press the USER button to return the printer to **Ready**. The USER button glows green.
8. Press the POWER button to power off the printer. Restart the printer and verify that the static IP address is correct.

Use IPv6 Addressing

The expanded address space provided by IPv6 is becoming increasingly common in network environments. A printer on an IPv6 network can be configured to use one or more of the following methods, depending on how the network is set up:

- **Link Local IPv6 address:** The printer and PC clients are restricted to the same subnet. Link local is enabled automatically when IPv6 is enabled and offers the best security for your network.
- **DHCPv6:** A DHCPv6 server is externally configured to give out an IPv6 address.
- **Stateless Address AutoConfiguration (SLAAC):** One or more routers with IPv6 enabled on the subnet give out a subnet prefix that allows access to IP addresses.
- **Manual IPv6 Address:** The printer has a designated IPv6 address on a specified subnet. The address does not change without manual intervention. This is similar to an IPv4 static IP address. Refer to "Set a Manual IPv6 Address (Optional)" on page 35.

To use IPv6 with the card printer, you need to connect to an IPv6 network and enable one or more address configuration methods. Link local, DHCPv6, and SLAAC automatically configure an address, but may require the necessary network support (DHCPv6 and routers). Refer to "Enable IPv6" for complete information about how to enable IPv6.

These instructions assume that your IPv6 network is configured and that you have the information you need to set up the card printer. If you need information about your network configuration, contact your network administrator.

Enable IPv6

Use the front panel **Configuration** menu to enable the IPv6 method used by your network.

The following example illustrates enabling a manual IPv6 address.

1. Enter the menu system.
   a. Press the USER button to suspend the printer.

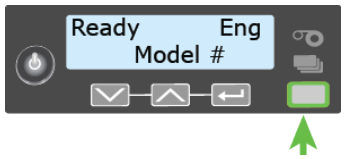

   b. Press ENTER to enter the menu system.

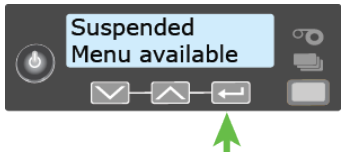

   c. Press the down arrow key until **Configuration** displays on line 2.

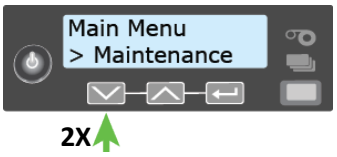

   d. Press ENTER to enter the **Configuration** menu.

   e. Press the down arrow to display **Network IPv6** on line 2.
   f. Press ENTER to enter the **Network IPv6** menu.

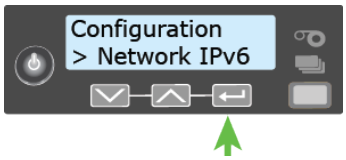

2. Press the down arrow until the type of addressing you want to enable displays on line 2.

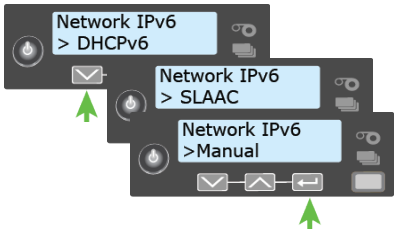

   - DHCPv6
   - SLAAC
   - Manual

The printer can have multiple IPv6 addresses, depending on your network environment. All of the IPv6 addresses can be used to access the printer.

3. Press ENTER to open the selected address menu.

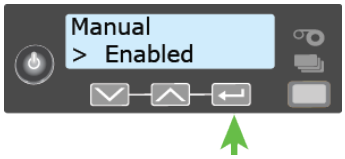

4. Press the arrow keys to enable the IPv6 address method.
5. Press ENTER to confirm your selection.

If you enabled DHCPv6 or SLAAC, the printer automatically obtains one or more IP addresses. If you want to enter a manual IP address, refer to "Set a Manual IPv6 Address (Optional)" on page 35.

Set a Manual IPv6 Address (Optional)

If you want the printer to keep the same IPv6 address at all times, you can enter a manual address using the **Configuration** menu. (This is similar to setting a static IPv4 address.)

You also can enter the IPv6 address using Printer Manager. You must access Printer Manager using IPv4 before you can set the IPv6 address. The **Printer Setting > Communication** menu allows you to type the IPv6 address information instead of using the LCD panel. Refer to ""Communication" on page 89.

1. Obtain the following values from your network support personnel. Make sure that you receive all values:
   - IPv6 address
   - IPv6 subnet prefix length
   - Gateway address

2. Make sure that the IPv6 manual address method is enabled. Refer to "Enable IPv6" on page 34.

   When you enable IPv6 manual addressing, **Manual Address** displays on line 2. Press ENTER to start entering the IP address.

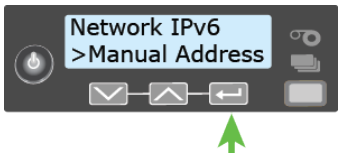

3. Enter the IPv6 address.

   An IPv6 address is represented as eight groups of four hexadecimal digits separated by colons. The address requires 39 characters to display. Because the LCD is limited to 16 characters per line, the IPv6 address is spread across three screens of the LCD. A digit at the end of line 1 indicates which section of the address is being displayed.

   A cursor appears under the digit that will change.

   a. Use the arrow keys to change each hexadecimal digit, from 0 to F.

   b. Press ENTER to move the cursor to the next digit.

   c. When the address section on the first screen is complete, press ENTER to display the next section of the address.

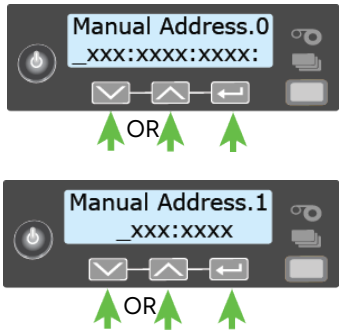

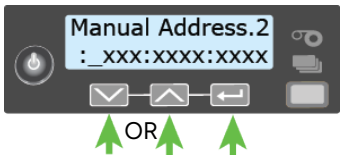

4. When all three sections are correct, press ENTER to save the address. **Prefix Length** displays on line 2.

5. Press ENTER to view or change the prefix length.

   The prefix length indicates the boundary between the subnet to which the host is connected and the device ID in the IPv6 manual address. Press the up or down arrow to change the prefix length.

6. Press ENTER to save your changes and display **Gateway Address** on line 2.

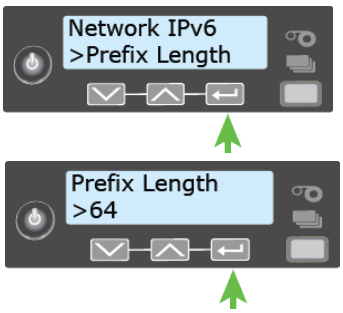

7. Press ENTER to start entering the default gateway address.

   a. Repeat step 3, a through c, to enter the gateway address.

   b. When all three screens are correct, press ENTER to save the gateway address.

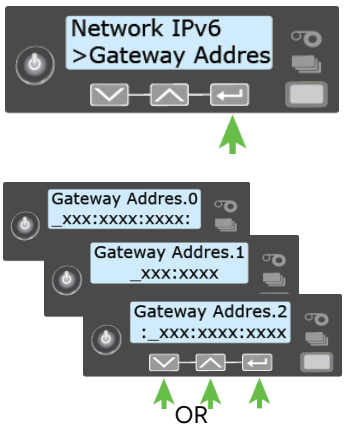

8. Press the down arrow key until **Exit** displays on line 2.

9. Press ENTER. Then, press the USER button to return the printer to **Ready**. The USER button glows green.

10. Press the Power button to power off the printer.
    Restart the printer and verify that the IP address is correct.

Test the IP Address Using a Local Network

You can set up a local network consisting of the printer and a computer. This allows you to test whether the printer and computer can communicate using the static IP address, and to test that the printer is functioning correctly. You might use this procedure if you set up multiple printers in a central location before installing them at individual sites.

- This procedure is optional.
- You also can use this procedure to connect a printer to a computer using an Ethernet cable if the USB port on the printer is unavailable.

The following procedure demonstrates testing a static IPv4 address.

1. Connect the printer directly to a computer using an Ethernet cable.
2. Open the Windows Network and Sharing Center and select **Local Area Connection**.
3. Click **Properties** on the Local Area Connection Status menu.

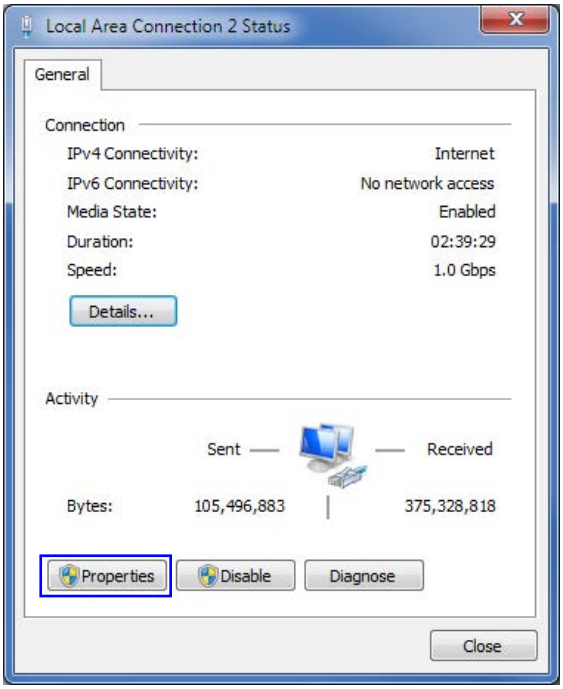

4. On the Local Area Connection Properties dialog box, select **Internet Protocol Version 4**
(TCP/IPv4). Click **Properties**.

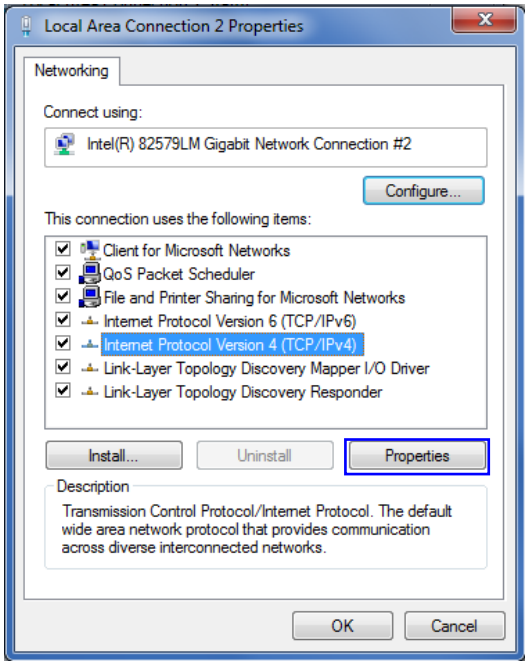

5. Use the Properties dialog box to enter the IP address information. Select **Use the following IP address**.

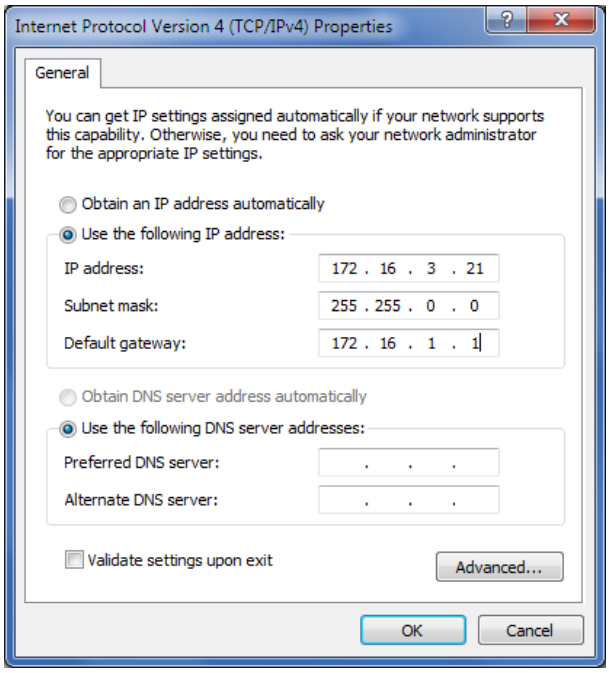

a. In the IP address field, enter the value for the static IP address that you set on the front panel of the printer. Give the last section of the IP address a value that is at least plus one from the address on the printer front panel.

For example, if the IP address that is set on the front panel of the printer is 172.17.1.113, enter the address as 172.17.1.114 on the computer.

b. In the Subnet mask and Default gateway fields, enter the subnet mask and default gateway address that you entered on the front panel of the printer.

c. When you finish entering values for IP address, subnet mask, and gateway address, click **OK**.

6. Test the printer to verify that it can communicate with the computer using the IP address. Run several test cards to make sure that the printer is functioning properly. Refer to "Print a Test Card".

7. Power off the printer and disconnect it from the computer.

8. Connect the printer to the network and power it on.

9. Log in to Printer Manager and configure the printer based on your requirements. Refer to Chapter 3: "Printer Manager" for complete information about using Printer Manager.

Print a Test Card

The printer includes a test card that prints without using a driver or other source of card data. Use it to verify that the printer is printing correctly. Make sure that cards are in the input hopper and all supplies are loaded before you begin. Refer to "Install Supplies" on page 20 for complete information.

1. Begin with the printer **Ready**. The USER button shows steady green.

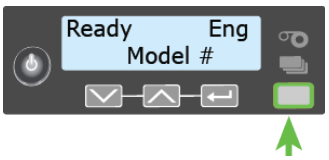

2. Press the USER button to display **Suspended** on line 1 of the LCD panel.

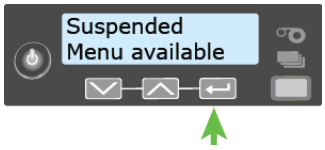

3. Press ENTER to enter the menu system.

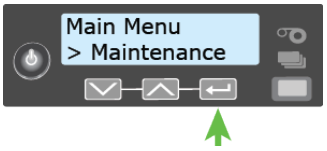

4. Press ENTER to enter the Maintenance menu.

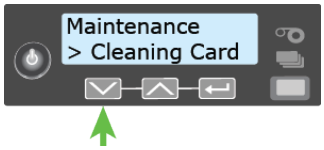

5. Press the down arrow until **Test Card** displays on line 2.

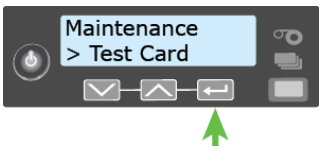

6. With **Test Card** displayed on line 2, press ENTER to display **Start** on line 2.

7. Press ENTER to print the test card.

   After the card prints, the printer returns to **Ready**.

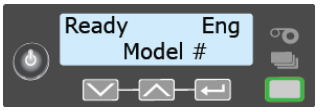

Set Up Network Access

Work with your network support personnel to make sure that the printer is set up within your organization.

You may need to perform the following tasks:

- Know the IP address of the printer.
- Set up network security.
- Define network permissions to the printer.

*Card Printers in Adaptive Issuance Instant Financial Issuance Software Setup Guide*Your organization is responsible for network setup and security.

Verify Network Communication

Access Printer Manager to verify that your computer and the printer can communicate over the network. You also can use Printer Manager to perform other printer setup tasks, as necessary.

Refer to Chapter 3: "Printer Manager" for complete information about using Printer Manager.

Use the Card Printer Driver

The Card Printer Driver uses Microsoft XPS print technology to support printing from currently available Microsoft Windows applications.

To use the CR805 card printer with the Card Printer Driver, you must install the driver and define the driver options. Refer to the *XPS Card Printer Driver User's Guide* for complete information about installing and setting up the Card Printer Driver.

Connecting to an Enterprise Network

Connecting to an Authenticated Enterprise Network

IEEE 802.1x authenticated enterprise networks (Ethernet or Wi-Fi) restrict access to authorized devices and users. They require either a username/password or a certificate to access the network. Both of these methods are supported by retransfer printers.

Preparing your Printer for Authenticated Network Access

A printer must be configured with the proper credentials to access your authenticated network. Contact your network administrator to gather the information you'll need to configure the printer. This will include some of the following:

- A TLS certificate
- A valid identify for one or both of the following printer settings:
  - **Communication** > **IEEE8021XIdentity**
  - **Communication** > **IEEE802XAnonymousIdentity**
- A valid password for the printer setting:
  - **Communication** > **IEEE8021XPasword**
- If you are using Wi-Fi, a valid network SSID for the printer setting:
  - **WifiNetworkStationSetup** > **WifiSSID**

Username/Password Authentication

Printer settings must be modified to configure a printer for authenticated network access. The settings are modified using the printer's Printer Manager WebAdmin interface.

Username/Password Authentication for wired Ethernet

To provision a printer for authenticated network access, follow these steps:

1. Have a valid username and password for your network.
2. Connect to the printer's Printer Manager WebAdmin site over a non-authenticated Ethernet or USB connection.
3. Access Printer Manager for the printer. Refer to "Access Printer Manager" on page 79.
4. Log into Printer Manager as WebAdmin, using the password set for that account.
5. Modify the following settings.

a. Click **Communication** > **IEEE8021XIdentity** and add a network username.

b. Click **Communication** > **IEEE8021XPasword** and add the network password.

c. Click **Communication** > **IEEE802XAnonymousIdentity** and add the anonymous network identity value.

d. Click **Set Current** to apply the settings changes.

6. Shut down the printer.
7. Connect the printer to the authenticated network.
8. Power on the printer.

Username/Password Authentication for Enterprise Wi-Fi

To provision a printer for authenticated Wi-Fi access, follow these steps:

1. Confirm that the printer has a Wi-Fi module installed.
2. Have a valid username and password for your network.
3. Connect to the printer's Printer Manager over a non-authenticated Ethernet or USB connection.
4. Access Printer Manager for the printer. Refer to "Access Printer Manager" on page 79.
5. Log into Printer Manager as WebAdmin, using the password set for that account.
6. Modify the following settings.

   a. Click **Communication** > **IEEE8021XIdentity** and add a network username.

   b. Click **Communication** > **IEEE8021XPasword** and add the network password.

   c. Click **Communication** > **IEEE802XAnonymousIdentity** and add the anonymous network identity value.

   d. Click **WifiModes** > **WifiMode** and set to **Station**.

   e. Click **WifiNetworkStationSetup** > **WifiSSID** and add the Wi-Fi network SSID.

   f. Click **WifiNetworkStationSetup** > **WifiSecurityMode** and set to **WPA2_Enterprise**.

   g. Click **Set Current** to apply the settings changes.

7. Shut down the printer.
8. Disconnect the Ethernet or USB cable.

The printer only supports one network connection type at a time.

9. Power on the printer.

Certificate Authentication

A custom TLS certificate must be loaded on the printer to configure a printer for authenticated network access. The certificate is loaded using Printer Manager.

The certificate loaded for network authentication will also be used for TLS encryption of the card production interface.

Certificate Authentication for wired Ethernet

To provision a printer for authenticated network access, follow these steps:

1. Using a TLS certificate that provides access to the network, create a certificate with the private key PEM file. For details on how to create a compatible certificate PEM file, refer to steps 1 and 2 of "Certificate with Private Key Workflow" on page 48.
2. Connect to the printer's Printer Manager WebAdmin site over a non-authenticated Ethernet or USB connection.
3. Access Printer Manager for the printer. Refer to "Access Printer Manager" on page 79.
4. Log into Printer Manager as WebAdmin, using the password set for that account.
5. Using the Certificate Management page, load the certificate. Refer to "Certificate with Private Key Workflow" on page 48.
6. Modify the settings your network administrator identified as required.
   a. Click **Communication** > **IEEE8021XIdentity** and add a network username.
   b. Click **Communication** > **IEEE8021XPasword** and add the network password.
   c. Click **Communication** > **IEEE802XAnonymousIdentity** and add the anonymous network identity value.
   d. Click **Set Current** to apply the settings changes.
7. Shut down the printer.
8. Connect the printer to the authenticated Ethernet network.
9. Power on the printer.

Certificate Authentication for Enterprise Wi-Fi

To provision a printer for authenticated network access, follow these steps:

1. Confirm that the printer has a Wi-Fi module installed.
2. Using a TLS certificate that provides access to the network, create a certificate with the private key PEM file. For details on how to create a compatible certificate PEM file, refer to steps 1 and 2 of "Certificate with Private Key Workflow" on page 48.
3. Connect to the printer's Printer Manager WebAdmin site over a non-authenticated Ethernet or USB connection.
4. Access Printer Manager for the printer. Refer to "Access Printer Manager" on page 79.
5. Log into Printer Manager as WebAdmin, using the password set for that account.
6. Using the Certificate Management page, load the certificate. Refer to "Certificate with Private Key Workflow" on page 48.
7. Restart the printer.
8. Log into Printer Manager using the WebAdmin account.
9. Modify the following settings.
   a. Click **Communication** > **IEEE8021XIdentity** and add a network username.
   b. Click **Communication** > **IEEE8021XPasword** and add the network password.
   c. Click **Communication** > **IEEE802XAnonymousIdentity** and add the anonymous network identity value.
   d. Click **WifiModes** > **WifiMode** and set to **Station**.
   e. Click **WifiNetworkStationSetup** > **WifiSSID** and add the Wi-Fi network SSID.
   f. Click **WifiNetworkStationSetup** > **WifiSecurityMode** and set to **WPA2_Enterprise**.
   g. Click **Set Current** to apply the settings changes.
10. Shut down the printer.
11. Disconnect the Ethernet or USB cable.

    The printer only supports one network connection type at a time.

12. Power on the printer.

Adding a TLS Certificate

Retransfer printers running firmware version R4.12.1/R4.52.1 or newer have the ability to add a TLS certificate onto the printer.

There are two supported workflows for loading a TLS certificate; the private key workflow which creates a TLS certificate for use by one or many printers, and the CSR[1] workflow which creates a printer-unique TLS certificate.

When a TLS certificate is loaded onto a printer, it is used in place of the Entrust-issued TLS certificate for the following functions:

Function	Certificate with Private Key Workflow	CSR Workflow
Enterprise network authentication of the printer	Yes	No
TLS encryption of card production communication*	Yes	Yes
Printer Manager certificate	Yes	No†
IIDaaS cloud authentication of the printer‡	No	No

* Assumes TLSEncryptAllCardData is enabled and used by card production application to communicate with the printer.
† The existing Printer Manager certificate remains in place. If no custom TLS certificate was ever uploaded (using the Certificate with Private Key Workflow), a factory self-signed certificate is utilized.
‡ The Entrust factory loaded TLS certificate is used for this feature.

1 CSR = Certificate Signing Request

Certificate with Private Key Workflow

With the private key workflow, you create a TLS certificate that can be used by one or by many printers. Using this workflow, you create a certificate along with chain certificates and an encrypted password-protected private key in a format that can be pasted onto a Printer Manager web page.

Use the following process to load a TLS certificate using the private key.

1. Create the certificate.

   Use the process you have in place to generate a TLS certificate with a private key.

   When requesting the certificate, be sure to specify that the certificate have both **Client Authentication and Server Authentication** in the Enhanced Key Usage field.

2. Convert the certificate to PEM format.

   The TLS certificate, along with any intermediate and root certificates, and the private key must be converted to a PEM format and combined into a single file with the certificates ordered as:

   - Encrypted private key at the top of the file
   - Followed by the printer certificate
   - Followed by the intermediate certificate
   - Followed by the root certificate

   The resultant text file contents will be pasted into a field on the Printer Manager certificates web page.

   The printer will not accept certificates with bag attributes. If the certificate includes these, they must be removed before loading the certificate onto the printer.

   As an example, the following OpenSSL command will create a correctly formatted PEM file.

   ```
   openssl pkcs12 -in printercertandkey.pfx -out printercertandkey.pem
   ```

   A prompt will display for an import password (the password on the pfx), and then asked for a new PEM passphrase to use to encrypt the private key in the pem file. A password is required to be setup. When loading the certificate, this passphrase will be entered and used to decrypt the private key.

   For printer firmware prior to R4.x4.1 the password must be between 4 and 14 characters and contain only letters and numbers.

   For printer firmware R4.x4.1 and newer, the password must be between 8 and 64 characters and may contain letters, numbers, and most special characters.

3. Load the TLS certificate.

   a. Open the combined certificate file in a text editor.

   b. Access Printer Manager for the printer. Refer to "Access Printer Manager" on page 79.

   c. Log into Printer Manager as WebAdmin, using the password set for that account.

   d. Click **Printer Setting** > **Certificates** in Printer Manager.

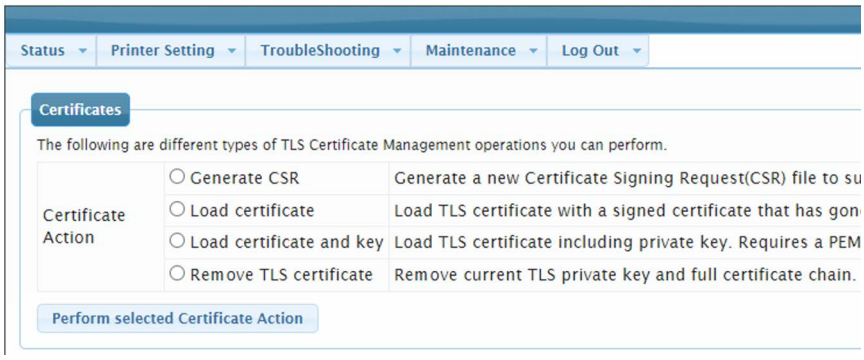

e. Select **Load certificate and key** (1), paste in the combined certificate text (2), enter the password to decrypt the private key (3), and click the **Perform selected Certificate Action** (4).

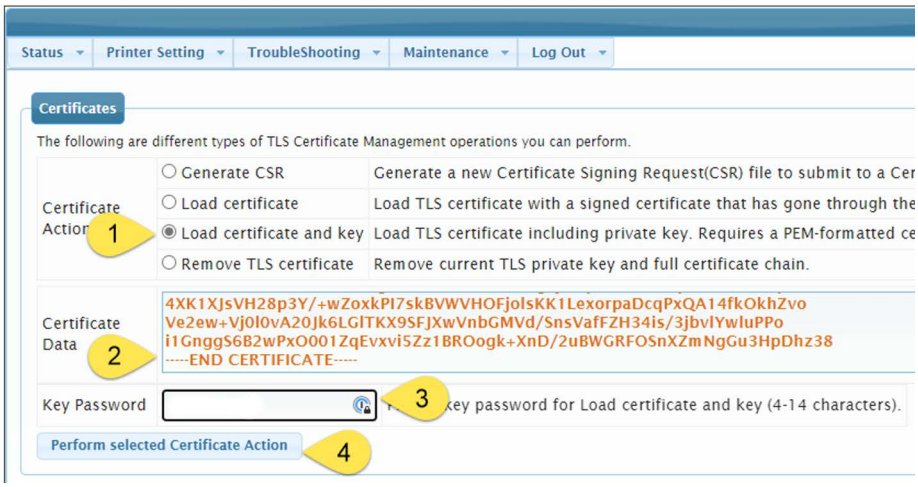

f. After a few seconds, the printer will report success.

If the printer reports an error, review the process used to create the certificate file.

4. Restart the Printer to activate the certificate.

   a. Click **Troubleshooting** > **Printer Reset** in Printer Manager.

   b. Click **Run** to restart the printer.

   c. Close Printer Manager.

If the certificate does not need to be applied immediately, you can restart the printer using the front panel when convenient. The new certificate will not be used until the printer is restarted.

5. Confirm that the new TLS Certificate is Active

   If you want to confirm that the new certificate is active on the printer, you can use the EDC Support Utility to view the certificates active on the printer.

   a. Download and install the EDC Support Utility

   b. Connect to the printer

   c. Select Certificate Info from the side panel of the utility

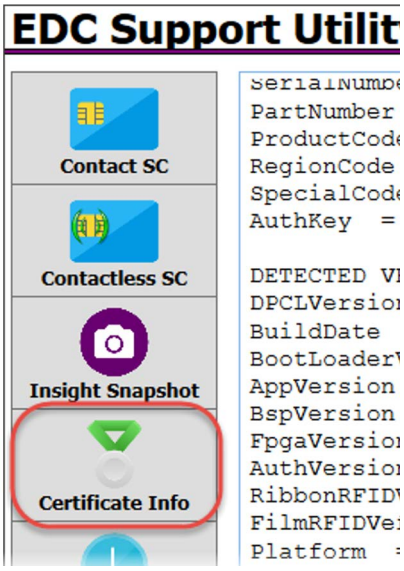

   d. After about a minute, text similar to that shown below will be displayed. Review the Printer-TLS certificate information to confirm it describes the TLS certificate you loaded.

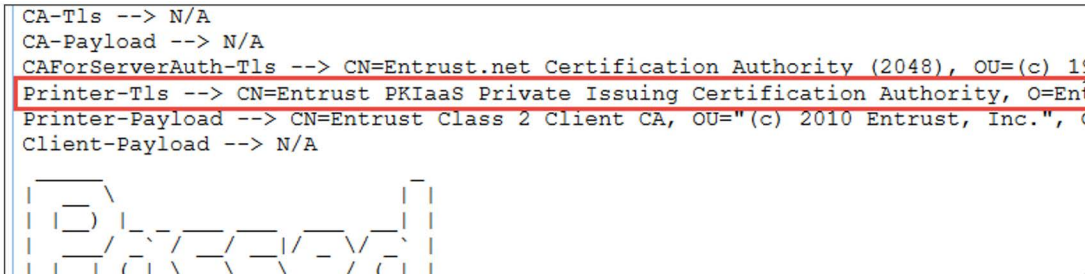

CSR Workflow

With the CSR workflow, the printer creates a CSR file that is signed by a trusted certificate authority to create a TLS certificate for that printer. Using this workflow, every printer receives a unique certificate.

Use the following process to load a printer TLS certificate using the CSR workflow.

1. Generate a CSR.
   a. Connect to the printer's Printer Manager WebAdmin site.
2. Access Printer Manager for the printer. Refer to "Access Printer Manager" on page 79.
3. Log into Printer Manager as WebAdmin, using the password set for that account.
   a. Click **Printer Setting** > **Certificates** in Printer Manager.

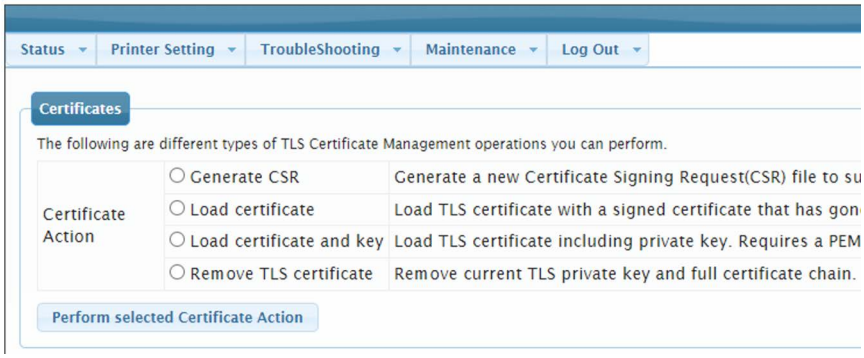

   b. Select the **Generate CSR** (1) and click **Perform Selected Certificate Action** (2).

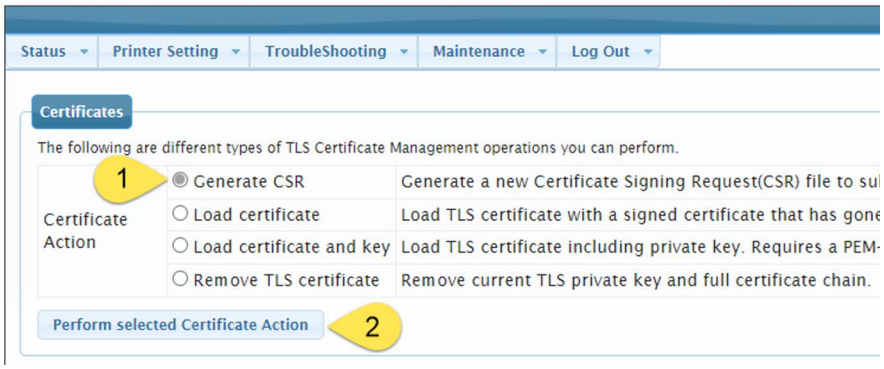

c. After a few seconds, a Generated CSR field will display. Select all the text from that field and copy it to a text file you'll use when you request a certificate.

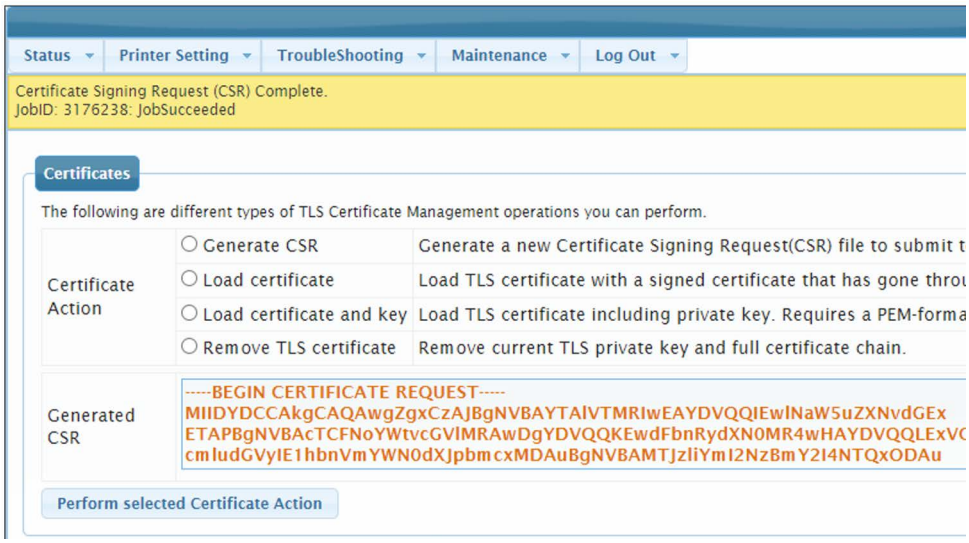

The printer provided CSR subject has the following format:
`/C=US/SbT=Minnesota/L=Shakopee/O=Entrust/OU=Printer Manufacturing/CN=c9707c3950f4312.printers.entrust.local`
From this. c9707c3950bf4312 is the unique device ID of the printer. The CSR subject string cannot be changed.

4. Use the CSR to request a TLS certificate.

   Use the process you have in place to generate a TLS certificate using the printer CSR.

   When requesting the certificate, be sure to specify that the certificate have both Client Authentication and Server Authentication in the Enhanced Key Usage field.

5. Convert the certificate to PEM format.

   The TLS certificate, along with any intermediate and root certificates provided must be converted to a PEM format and combined into a single file with the certificates ordered as:

   - Printer certificate at the top of the file
   - Followed by the intermediate certificate

- Followed by the root certificate.

> The printer will not accept certificates with bag attributes. If the certificate includes these, they must be removed before loading the certificate onto the printer.

The resulting text file contents will be pasted into a field on the Printer Manager certificates web page.

As an example, if the TLS certificate request results in three certificates: PrinterCertificate.crt, Intermediate.crt, and Root.crt; the following OpenSSL commands will create a correctly formatted PEM file.

```
openssl x509 -in PrinterCertificate.crt -outform PEM -out
PrinterCertificate.pem
```

```
openssl x509 -in Intermediate.crt -outform PEM -out Intermediate.pem
```

```
openssl x509 -in Root.crt -outform PEM -out Root.pem
```

```
cat PrinterCertificate.pem Intermediate.pem Root.pem >  cert_chain.pem
```

6. Load the TLS certificate.
   a. Open the combined certificate file in a text editor.
   b. On the same printer that generated the CSR, connect to the printer's Printer Manager WebAdmin site.
   c. Log into Printer Manager as **WebAdmin**, using the password set for that account.
   d. Click **Printer Setting** > **Certificates** in Printer Manager.

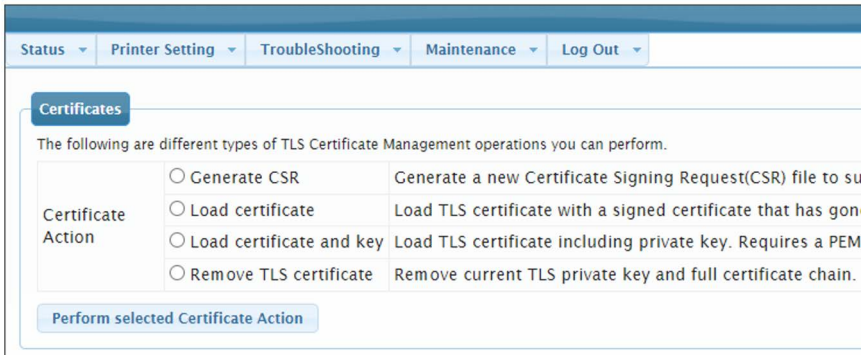

e. Select **Load certificate** (1), paste in the combined certificate text (2), and click **Perform selected Certificate Action** (3).

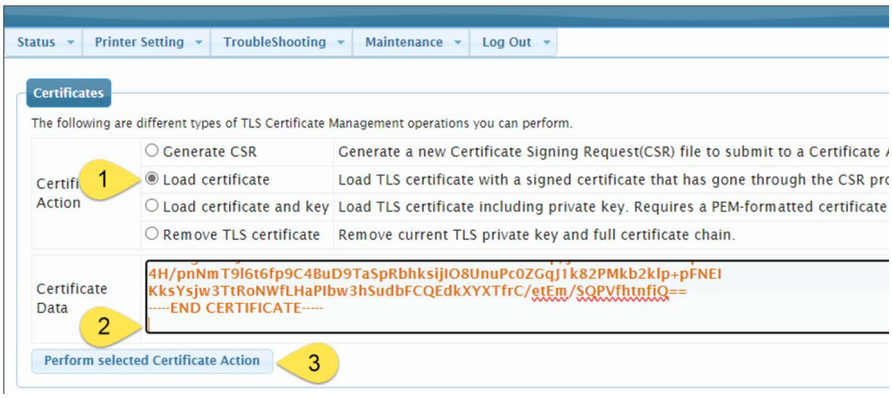

f. After a few seconds, the printer will report success.

If the printer reports an error, confirm that this is the same printer that generated the CSR and that the contents of the combined certificate file seem accurate.

7. Restart the printer to activate the certificate.

   a. Click **Troubleshooting** > **Printer Reset** in Printer Manager.

   b. Click **Run** to restart the printer.

   c. Close Printer Manager.

If the certificate does not need to be applied immediately, you can restart the printer using the front panel when it is convenient. The new certificate will not be used until the printer is restarted.

8. Confirm that the new TLS certificate is active.

   If you want to confirm that the new certificate is active on the printer, you can use the EDC Support Utility to view the active certificates.

   a. Download and install the EDC Support Utility.

   b. Connect to the printer.

   c. Click **Certificate Info** from the side panel of the utility.

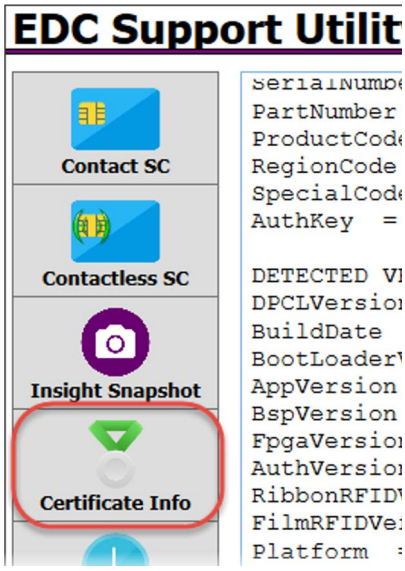

   d. After about a minute, the following text will be displayed. Review the Printer-TLS certificate information to confirm it describes the TLS certificate you loaded.

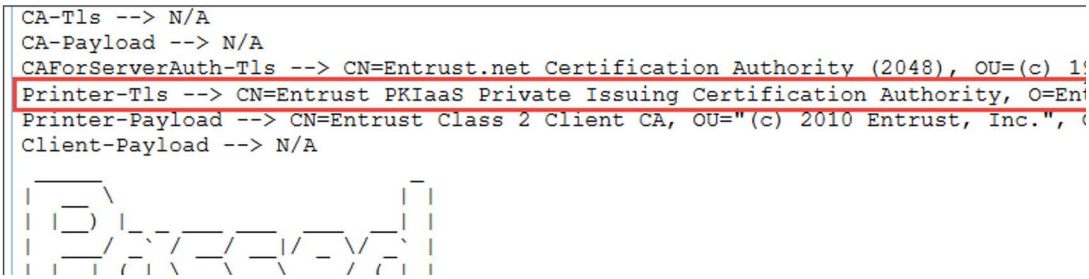

Chapter 2: Elements of Card Design

2

Card design is the name given to the combined features of the processed cards. An organization can have multiple card designs.

This chapter provides the following information about card design:

- Basic Card Design
- Printing Design on page 58
- Magnetic Stripe Design on page 70
- Smart Card Processing on page 73
- Settings for Card Design in Printer Manager on page 75

Basic Card Design

Card design includes:

- Color and monochrome printing.
- The various types of data, such as name, account number, and special features such as a magnetic stripe, signature panel, and smart card chip.
- The layout of the data.
- Optional lamination for enhanced wear protection and security (laminating systems only).
- Optional ultraviolet (UV) printing for enhanced security.

Printing Design

Printing design includes color and monochrome printing, bar code printing, non-printing areas, and card layout.

Color Printing

CMYKP Ribbon

The retransfer printing process uses two types of supply: a color pigment ink ribbon and a retransfer film. The color ink ribbon typically contains the following panels, C (cyan), M (magenta), Y (yellow), K (black), and P (primer). Other ribbon types also may have an ultraviolet (F) panel or an inhibitor (I) panel. Ink ribbons without a primer (P) panel also are available.

The printer prints separate layers of cyan, magenta, yellow, black, and primer on a transparent retransfer material. Heat from the printhead causes the ink pigment to release from the ribbon and adhere to the retransfer material. The printed images are then transferred to the card using a heated roller.

The layers are applied to the card in the reverse order that they were applied to the retransfer film. The primer, which is applied last to the retransfer film, is applied first to the card and allows the image layers to bond to the card surface. The retransfer film consists of a carrier material and a film coating. The coating is applied last to the card and acts as a protective layer for the printing. You can select to apply a second layer of the retransfer film coating for added durability.

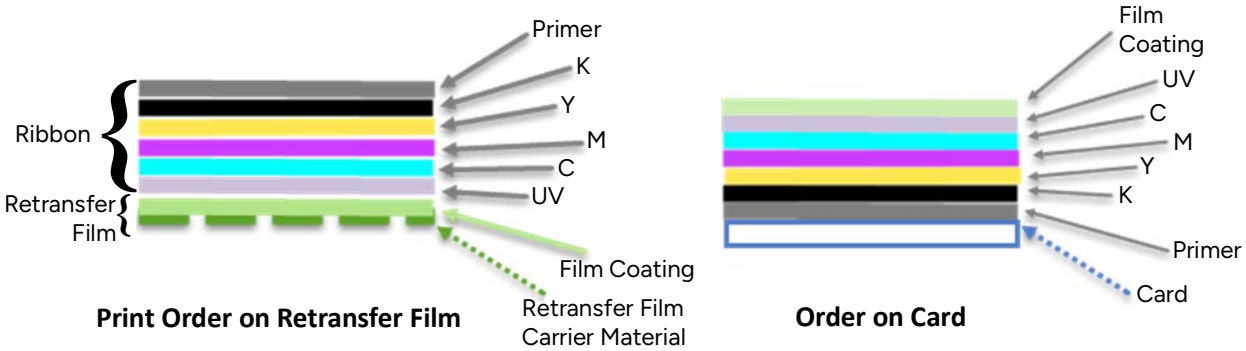

Images printed using a primerless ribbon are applied to the card without a primer panel. Refer to "Card Material" on page 147 for more information about the card types that support primerless ribbon.

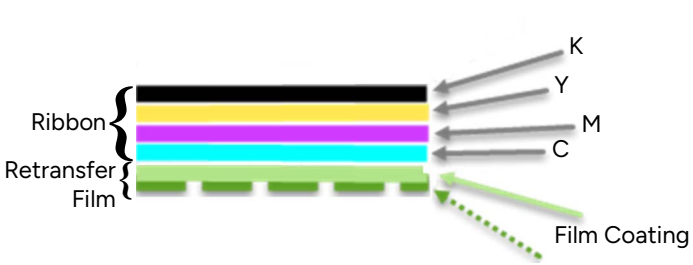

Print Order on Film

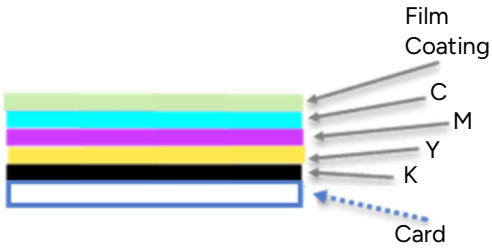

Order on Card

If the printer includes the optional laminator, the patch overlay applied by the laminators provides additional protection against wear.

Color ink ribbons with an ultraviolet F (fluorescent) panel, FCMYP-KP, also are available. The UV printing is undetectable under normal lighting and provides an additional form of security.

FCMYP-KP Ribbon

Refer to the *XPS Card Printer Driver User's Guide* or your card personalization software documentation for more information about setting up a card design that includes UV printing.

Ink ribbons also may include an I (inhibitor) panel that prevents any ink or retransfer material from bonding to areas of the card that have a magnetic stripe or signature panel.

CMYKP-KPi Ribbon

The inhibitor is used only to prevent printing on the magnetic stripe and signature panel. It is available only on the back side panel set.

Ink ribbons without a primer (P) panel (CMYK and CMYK-K) do not include an inhibitor panel and thus do not support cards with a magnetic stripe and signature panel. The ribbons require a compatible retransfer film. Refer to "Printer Supplies" on page 144 for information about compatible ink ribbon and retransfer film. Primerless ribbons require a PVC surface on the card stock. Contact your card supplier to determine if the card stock is compatible with the ink ribbon.

CMYK Ribbon

Color Management

The printer uses color modes that are calibrated and installed in the printer during manufacturing. You can select the color mode that best meets your card printing requirements. Refer to "Print" on page 100 for more information.

Print Text in Color

The printer can print text in any color. It prints at a resolution of 600 x 600 dpi and can support type sizes down to 2-point text. Small characters are likely to be more readable if you use a sans-serif font formatted as black and printed with the black (K) panel. Refer to "Print Text in Monochrome" on page 61.

Print Graphics in Color

The printer produces full-color images from most types of graphics. It can use BMP, JPEG, TIFF, and PNG file formats for photos and logos.

Vector graphics, such as WMF and SVG files, have components such as shapes with lines and fills. Components defined as black normally print with the K panel.

Because the printer is pigment-based, the black panel is used to darken other colors, in addition to printing any black elements. The black ink is beneath the color (YMC) pigments when they are placed on the card. The Card Printer Driver or your ID software handles sending the card elements so they print correctly on the card.

Types of Color Images

Cards can include both color photos and color logos. The logo is usually the same on each card, and the photo is unique. Follow these guidelines to obtain the best results for printing both logos and photos.

1. Evaluate the color quality of the photos:
   a. Adjust the image capture system to get the best quality photos; work with distance, lighting, and camera settings to obtain consistent, high-quality photos.
   b. Evaluate the quality of printed photos after the image capture system is optimized.
2. Evaluate the other color areas of the card, such as text or logo:
   a. Check your card production application for settings that can help improve the printed color of text.
   b. Use an image editing application to adjust the color of a logo file for optimal printing.

Monochrome Printing

Monochrome printing prints cards using a single color. You can use the black panel of a full-color ribbon to print monochrome elements.

Monochrome Printing with Full-Color Ribbon

Full-color ink ribbon includes a black panel. Text and bar codes are usually printed with the black panel. Full-color print ribbon also prints any monochrome or one-bit-per-pixel graphics using the K panel.

Print Text in Monochrome

Printing text using a K panel can make text look crisp, because it uses only one panel for printing.

The font used also affects legibility. The printer reliably prints 2-point Arial font. Bold, sans-serif fonts are more readable after printing than serif fonts, or fonts with thin strokes, as shown at right. In the example, fonts that print well are shown toward the top of the card.

Print Bar Codes

Bar code design follows a set of standards based on the type of bar code produced. Bar codes contain a series of black lines (bars) separated by white areas (spaces). Each character of encoded data is represented by a set of bars and spaces. A bar code standard specifies the number and width of bars and spaces needed to encode a character. The standard also specifies the minimum size of the white area, or quiet zone, that surrounds the bar code.

Refer to "Print Bar Codes with the Card Printer Driver" on page 63 for information about how using the Card Printer Driver can improve the probability that a bar code prints using the K panel.

Bar Code Guidelines

Bar codes print more successfully when you observe the following guidelines. Follow the standards for the type of bar code you are printing.

Bar Code Placement

- Maintain the required quiet zone around the actual bar code, as shown in the illustration.
- Locate bar codes at least 0.25 inch (6.3 mm) from other printing and from the edge of the card.

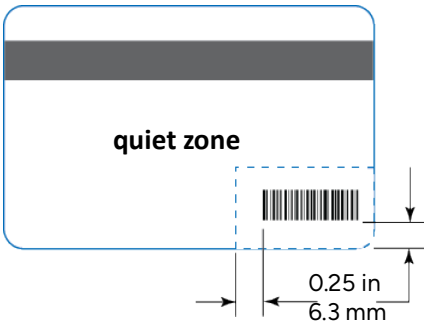

Bar Code Size

- A lower density bar code is easier to read, because the bars are wider and spaced farther apart.
- The width of the narrow elements in the bar code must be large enough to be read consistently. The capabilities of the bar code reader can influence this.
- The bar code must be tall enough to be read under normal conditions.

Bar Code Print Settings

- To achieve the best quality printing and improve the readability of the bar code, use the K (black) panel of the color ink ribbon to print the black bars. Bar codes printed with the color panels may not be as crisp and sharp as those printed with the K panel only. Refer to the *XPS Card Printer Driver User's Guide* or the documentation for your card personalization software for more information about how to print bar codes using the K panel.
- Infrared readers require that the K panel be used to print the bar code.

Test Bar Codes

Always test the readability of bar codes under production conditions. Factors to consider include:

- If you print cards one at a time, print the samples using that method. If you print cards in batch (many cards sent to the printer at the same time), use a production-sized batch and evaluate cards from the beginning, middle, and end of the batch.
- Use exactly the same card stock for testing that you use for production. The card stock can affect the readability of bar codes. Usually, a white surface that reflects light in many directions is needed. Test cards before purchasing production quantities.
- Include other card design components that you use in production.
- Use the same bar code readers that users have, and test each card multiple times. Also test multiple cards.

Card Design Changes That Affect Bar Codes

If you make substantial changes to the way you produce cards, review your setup tasks to make sure that cards continue to have the quality you require.

The following production changes can change the color of some images and can affect bar codes:

- Purchasing a new brand of card stock
- Changing to, or from, preprinted cards

If you change the design of your cards, or if you start producing an additional card design, test each design as described in "Test Bar Codes" to make sure that the bar code prints as expected.

Print Bar Codes with the Card Printer Driver

The Card Printer Driver can tell the printer to use the black (K) panel to print the bars of a bar code embedded in a color image, making it more likely to be read properly by a scanner. Refer to the *XPS Card Printer Driver User's Guide* for complete information.

Apply a Second Layer of Retransfer Film

The printer can apply two layers of retransfer film to the front side or both sides of the card. The second layer of retransfer film does not have any printing on it, but it provides added durability for the card.

The second retransfer film layer must be requested when the card is sent to the printer.

- If you use an ID software application, refer to your application's documentation for more information.
- If you use the Card Printer Driver, select the **Printing Preferences > Advanced Options** setting and select **Apply second layer of retransfer material**. You also can use an escape to specify the second retransfer layer on a card-by-card basis. Refer to the *XPS Card Printer Driver User's Guide* for more information.

- You cannot apply retransfer film over the magnetic stripe or signature panel on the back side of the card. Do not request a second layer of retransfer film on both sides if your card has a magnetic stripe or signature panel on the card back. Because the inhibitor panel is not used, the second layer of film will be applied over those features and make them unusable.
- If you use an ink ribbon without a primer (P) panel, you can apply a second layer of retransfer film to both sides of the card. Because the ribbon does not support cards with a magnetic stripe or signature panel, applying a second layer of retransfer film is supported.

If your system is equipped with a laminator, you can use it to apply overlay material to the front and back of the card for durability and security. Refer to "Laminator Supplies" on page A-17 for information about the types of overlays available.

Non-Printing Areas

The card design can have areas where printing or retransfer film cannot be placed, such as a magnetic stripe, signature panel, or smart card chip. The inhibitor panel of the ink ribbon prevents the retransfer film from bonding to the magnetic stripe and signature panel. You must block the application of printing and primer over the smart card chip using Card Printer Driver pre-set masks or escapes, or design elements in your card production software.

Card production software and the Card Printer Driver usually manage standard non-printing areas automatically. If necessary, you can use the measurements provided in the following sections to customize your non-printing areas.

The dimensions shown are examples to help you determine the non-printing area. The actual dimensions can vary depending on the card stock you use.

Print several cards using your card design and application to verify that the card is printing as you intend.

When you specify the non-printing area over a feature, the retransfer film must overlap all edges of the feature by 0.5 mm. This makes the actual non-printing area smaller than the feature. The dotted lines in the diagrams in the following sections show the retransfer film overlap onto the magnetic stripe or smart card chip.

Standard Magnetic Stripe Non-Printing Area

The magnetic stripe typically is located on the back of the card.

The following table shows the standard measurements for magnetic stripes. Use these values if you need to define a non-printing area. The retransfer film must overlap the magnetic stripe by 0.5 mm (indicated by the dotted lines).

	A	**B**	**C**
3-track	5.0 mm	13.5 mm	86 mm
2-track	6 mm	9 mm	86 mm
Single-track (JIS)	7.5 mm	7.5 mm	86 mm

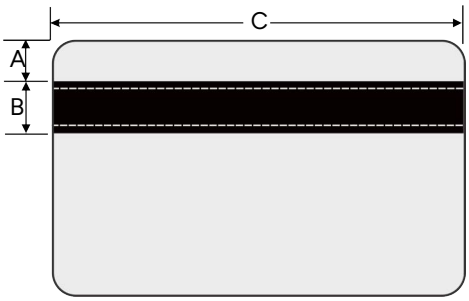

Standard Smart Card Non-Printing Area

The smart card area typically is located on the front of the card.

The following table shows the measurements for a typical smart card chip. The smart card chip can vary in size, shape, and location. Adjust these values based on the card stock you use. The retransfer film must overlap the smart card chip by 0.5 mm (indicated by the dotted lines).

A	**B**	**C**	**D**
19.5 mm	10 mm	13 mm	12 mm

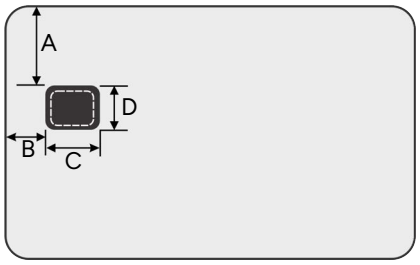

Custom Non-Printing Areas

You can use ID software, a custom application, or Card Printer Driver escapes to define custom non-printing areas for the following:

- A signature panel

- More than one area on the back side of the card, for example, a magnetic stripe and a signature panel

We recommend that you do not define non-printing areas over other parts of the card. The retransfer film will be placed over these areas even if no printing is present.

Card Layout

The arrangement or layout of components determines how well your card design works for users. Use the following guidelines when creating a card design.

Image Size

The image that is sent to the printer is larger than the card size. The printer adjusts the image to fit the card, which allows the printer to print up to the edge of the card with no unprinted margins.

	Size (pixels)	Description
Image	2100 x 1344	The size of the 600 dpi image that is sent to the printer.
Film Canvas	2059 x 1312	The size of the non-masked portion of the image after the printer masks off the edges.
Image Size on Card	2023 x 1276	The portion of the film canvas image that prints on the card. **Note:** The image origin on the card can vary, depending on the software application used to send the print job.

The following illustration shows the image that is sent to the printer:

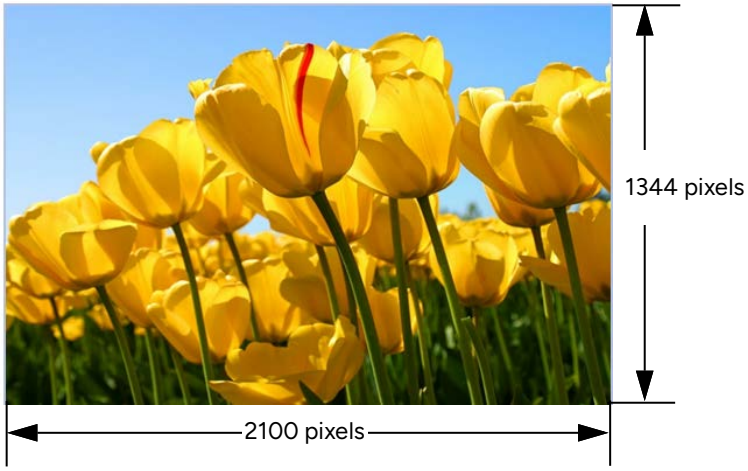

Image Sent to the Printer
2100 x 1344 pixels

The printer then masks the edges of the image and prints the image on the card. The image prints to the edge of the card with no unprinted margins.

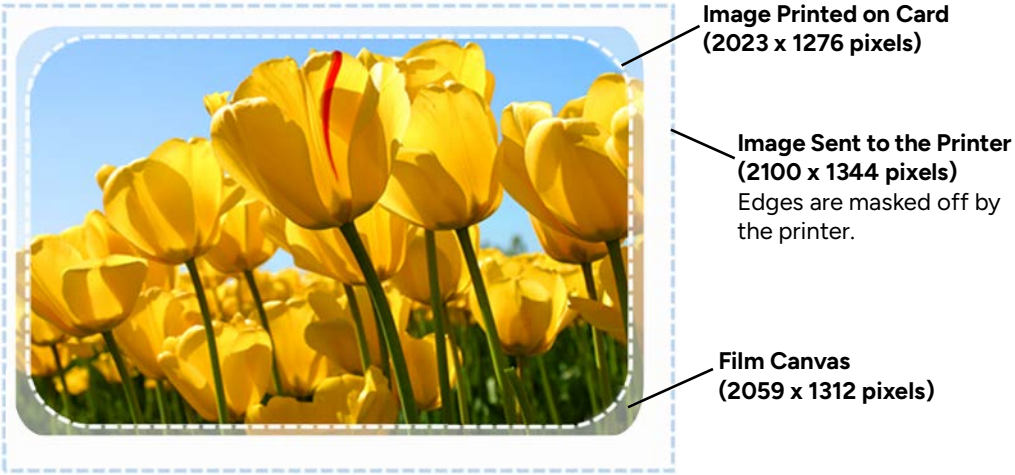

Image Printed on Card After Processing by the Printer

Backgrounds

Use the following suggestions to help you select a background for a professional-looking card.

- Use colors and images that do not make it difficult to read the text on the card.
- Use 600 dpi images that are sized to match the image canvas.

Image Placement

Use the following suggestions to help you place important images, such as a photo, logo, or bar code. When placing images, avoid areas of high wear.

- Do not place an important image on the front of the card in the same area as a magnetic stripe or other machine-readable feature. Frequent use of a card in a reader can wear away the image on the opposite side of the card.
- Do not place an important image directly on the opposite side of a smart card chip.

Magnetic Stripe Design

The printer's magnetic stripe module allows the printer to process magnetic stripe data. There are two magnetic stripe configuration options: ISO and JIS. Use the printer configuration labels (described in the printer's *User's Guide*) to determine the type of module installed.

Magnetic Stripe Data Formats

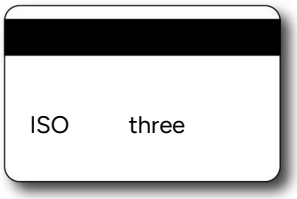

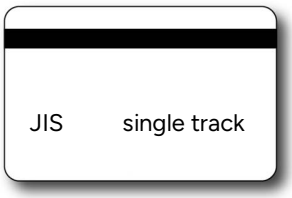

The module format (ISO or JIS) defines the type and format of the information to encode. The standard ISO format (also known as IAT) is a three-track option. The JIS format is a single-track option. Both formats include default data settings that determine how many characters can be encoded on each track, and which characters can be encoded.

Your cards can use the default format for each track, or can use a different combination of tracks and data formats.

Three-Track Option (ISO/IAT)

The default data formats for a three-track magnetic stripe option are:

- Track 1 — IATA
- Track 2 — ABA
- Track 3 — TTS

This combination is often abbreviated IAT. This format is also called ISO format.

IATA (International Air Transport Association)

The maximum number of characters for IATA format data is 76 characters. These characters can include spaces, uppercase alphabetic characters (A–Z), numeric characters (0–9), and the following special characters:

! # $ % ' ( ) * + , - . / ; : < @ > = ^] \ [" & _

ABA (American Bankers Association)

The maximum number of characters for ABA format is 37 characters. Numeric characters (0–9) and the following special characters are allowed:

: ; < = >

TTS (Thrift Third Standard)

The maximum number of characters for TTS format is 104 characters. Numeric characters (0–9) and the following special characters are allowed:

: ; < = >

Single-Track Option (JIS)

The default data format for a single-track magnetic stripe module is the JIS (Japanese Industrial Standard) Type II format.

The maximum number of characters for the JIS format is 69 characters. These characters can include spaces, numeric characters (0–9), uppercase alphabetic characters (A–Z), lowercase alphabetic characters (a–z), and the following special characters:

! " # $ % & ' ( ) * + , - . / : ; < = > ? @ [ ] ^ _ ~ { | } ~

A PC running a Japanese edition of a supported Windows operating system also supports Japanese-language special characters and 55 Katakana characters. They include the following:

- Special characters:

  。 「 」 、 ・ ー ゛ ゜

- 45 Katakana characters:

  ア イ ウ エ オ
  カ キ ク ケ コ
  サ シ ス セ ソ
  タ チ ツ テ ト
  ナ ニ ヌ ネ ノ
  ハ ヒ フ ヘ ホ
  マ ミ ム メ モ
  ヤ ユ ヨ
  ラ リ ル レ ロ
  ワ ン

- 10 Katakana characters:

  ヲ ァ ィ ゥ ェ ォ ャ ュ ョ ッ

The magnetic stripe data uses shift-JIS, which embeds a hidden "shift-in" and "shift-out" character each time the Japanese-language characters start and end. Each transition between normal characters and shifted characters is surrounded by these two control characters. They are encoded on the magnetic stripe. Thus, each hidden character reduces the number of characters you can encode by one character.

Magnetic Stripe Coercivity

The printer may require additional settings to match the coercivity of the card. When these values are set they remain the same for all cards processed using the same design. The defaults are set to standard ISO format and high coercivity. Refer to "MagStripeGeneral" on page 111 for information about changing the coercivity.

The type of magnetic stripe cards you use must match the type of module installed. Test your system to make sure that the printer is encoding magnetic stripe information properly.

Smart Card Processing

Smart card processing differs from other types of card personalization. The "smart card" step of personalization is controlled by an application that is separate from the rest of card personalization.

The smart card reader can be factory-installed, or installed later as a field upgrade by a service provider or value-added reseller. The printer configuration label (or a label attached at the time of the field upgrade) shows the type of smart card reader installed. You can request additional information about the smart card reader and the type of cards to use from your service provider or value-added reseller.

Smart Card Processing Requirements

The following items are required to personalize smart cards:

- A smart card reader in the printer
- A USB cable to connect the smart card port to the PC for loosely coupled smart card readers (this cable is not needed for single-wire processing)
- A card production application that is designed to work with the printer and the smart card application
- Smart cards that work with the reader installed in the printer

Smart Card Codes on the Printer Labels

The configuration labels include codes that identify the type and model of the smart card reader installed in the printer. The following table lists the codes used on the configuration labels.

Code on Label	Type of Smart Card Module
S1	Integrator Contactless
S5	iCLASS Read/Write Contactless
S11	Identive
S12	pcProx Plus Dual Frequency
S13	DUALi Single Wire
S14	OMNIKEY
S16	OMNIKEY Single Wire

The S1 value on the configuration label indicates that the printer has the basic smart card components installed. Basic components include the mounting hardware only. An integrator must install a contactless reader.

If the S*x* value is included in the configuration code, the printer has the basic components of an S1, plus the appropriate interface installed.

The smart card readers available may vary by printer model. Contact your authorized dealer for more information.

Single-Wire Smart Card

Single-wire smart card processing allows a single USB or Ethernet connection with the printer to carry data for both smart card personalization and printing.

The single-wire smart card feature is available through the Windows Driver Software Development Kit (SDK), or through your card personalization software.

The single-wire smart card programming interface is similar, but not identical, to the PC/SC standard. Applications using PC/SC to personalize smart cards may require modification to use the single-wire smart card interface.

Settings for Card Design in Printer Manager

Printer Manager contains card design settings that administrators and service providers can use to set up card production. The card design settings include magnetic stripe setup and smart card testing. Printer Manager also contains troubleshooting features such as a log file that can track all processes of a card job. Service providers can use the information in the log file to troubleshoot and relay information when troubleshooting card processing issues. Refer to Chapter 3: "Printer Manager" for more information.

Chapter 3: Printer Manager

3

This section describes Printer Manager, the Entrust web interface available to users, administrators, and Entrust service providers.

Printer Manager

Printer Manager is a web-based interface that displays information about the printer. System administrators and service providers can use Printer Manager to fine-tune card appearance, set advanced options, and troubleshoot printing problems. You can access Printer Manager using an Internet browser and the IP address of the printer.

Printer Manager includes different user access levels that control the type of information that can be viewed. You can choose from three user access levels to perform a variety of basic and advanced tasks: WebUser, WebAdmin, and WebService.

Printer Manager User Access Levels

The **Username** field controls the level of access to information and settings that correspond to the user's job responsibility.

WebUser

WebUser access allows users to view information and change a limited number of values. The WebUser access level typically is used by the person responsible for printing cards. Other responsibilities can include cleaning the printer, ordering printer supplies, or printing a daily or weekly log of card production.

The WebUser access level displays four menu selections: Status, Printer Setting, Maintenance, and Log Out.

WebAdmin

WebAdmin access allows an administrator to make minor adjustments to the printer. The WebAdmin user has access to configuration options and the use of diagnostics tools for troubleshooting. The WebAdmin user also can specify a password (using the **Printer Settings > Update Password** option) for WebUser access-level users.

In a card production environment, the WebAdmin access-level user typically sets up the card design, verifies communication with external data sources, and tracks printer activity and performance.

WebService

WebService access has all of the above adjustments with additional access to test and adjust motors, sensors, and other internal components.

The WebService user typically is an Entrust-trained service provider.

Access Printer Manager

The initial Printer Manager screen allows users to log on with a user name and password that determine their user access level. The user access level determines which menu items, options, and adjustments are available.

1. Make sure that the printer's LCD panel displays **Ready**.
2. Access Printer Manager in one of the following ways:
   a. From the Card Printer Driver, open the **Printer Properties** window for the printer and select the **Printer Status** tab.
   b. Click **Configure Printer** to launch Printer Manager in your default browser.

   OR

   a. Obtain the printer network IP address and write it down. Refer to the printer's *User's Guide* for detailed information about how to retrieve the printer IP address.
   b. Open a web browser on the PC and enter the IP address:

      IPv4: Enter the address using the following format: https://*xxx.xxx.xxx.xxx*

      For example: https://123.12.3.123

      IPv6: Enter the address using the following format. You must enclose the IPv6 address in brackets ([and]).
      https://[*xxxx:xxxx:xxxx:xxxx:xxxx:xxxx:xxxx:xxxx*]/

      An IPv6 address is represented as eight groups of four hexadecimal digits separated by colons. For example,
      2001:0db8:0000:0000:0000:ff00:0042:8329

      However, you can abbreviate the address as follows:

      - Remove one or more leading zeros from a group—2001:db8:0:0:0:ff00:42:8329
      - Replace consecutive sections of zeros with a double colon (::). You can do this only once in the address—2001:db8::ff00:42:8329.

      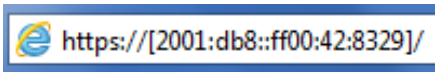

- When you use a secure protocol (https), the browser may display a warning message indicating a problem with the website's security certificate. Continue to the website to access Printer Manager.
- **Windows 10 Users:** If the "site not secure" window displays, click **Details** to expand the window, and then click **Go on to the webpage**.

3. When the Printer Manager Log In screen displays, select the language in which to display the Printer Manager session from the Select Language column.

4. In the **Please Log In** section, select a Username that matches your job responsibility and enter a password (if required). Refer to "Printer Manager User Access Levels" on page 78 for a description of the user access levels.

5. Click **Log In** to display the Printer Manager Welcome page.

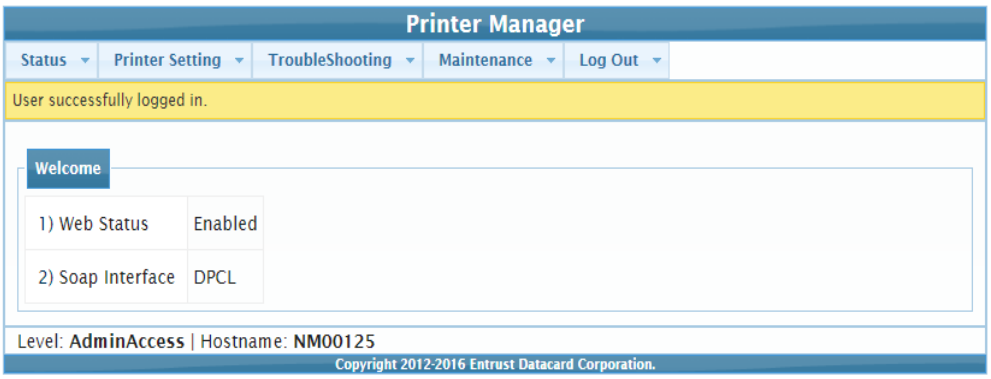

HINTS & TIPS

- If the browser cannot connect to the printer, make sure that **Ready** displays on the LCD panel of the printer.
- Some Printer Manager pages feature hover text that displays help information when the cursor hovers over the setting in the description column.

Printer Manager Settings

The printer is shipped with recommended settings in Printer Manager. You may need to change these settings to customize the printer for your site. Printer Manager provides access to the printer settings.

Many of the Printer Manager menu options display the **Set Current** button. **Set Current** saves any changed settings on the displayed page. When you change a value and click **Set Current**, the printer uses the new settings. If you exit a page without clicking Set Current, your changes are not applied.

If you enter a value outside the allowed range for a setting, the settings are not updated and a message displays asking you to correct your entry.

If you enable or disable a feature in Printer Manager, restart the printer for the new setting to take effect.

Print a Printer Manager Page

Use your Internet browser Print option to print the information from any Printer Manager page to a paper printer.

- Select **File > Print** from your Internet browser's main menu.
- If the printed page does not display all the information from the Printer Manager, select **File > Print Preview** in your Internet browser to scale the image to fit the paper.

Use Printer Manager

The following sections describe how to use the options on the Printer Manager menus that are available to WebUser and WebAdmin access-level users. For information about settings available to the WebService access level, contact your service provider.

The options available in Printer Manager are determined by the printer model and the options installed on the printer. The Printer Manager options described in the following sections may not be available for all printers.

Status Menu

The **Status** menu displays general information about the printer and its usage statistics. Users at all access levels can view or print the Status menu information. You cannot change the information on the Status menu.

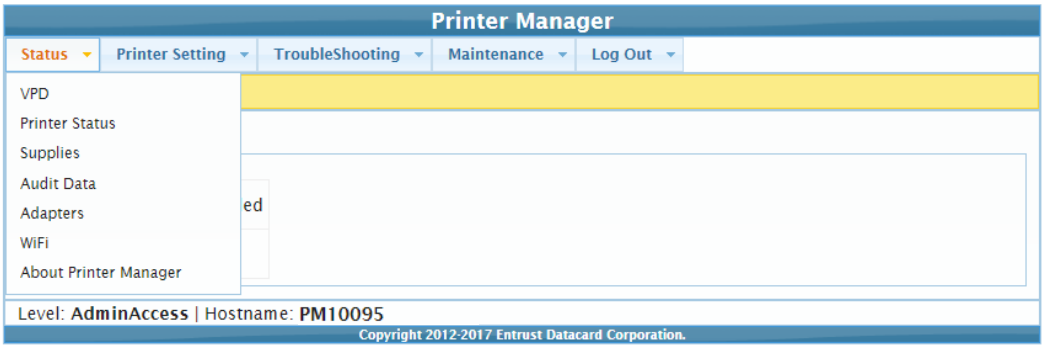

Status Menu Option	Function	WebUser	WebAdmin
VPD	Display printer vital product data (VPD), including the manufacturer, model, installed options, serial numbers, and version numbers. Print this page for reference if you need to contact your service provider.	View	View
Printer Status	Display printer status information, including the printer mode, the printer state, how long the printer has been powered on (in seconds), current conditions, and job status.	View	View
Supplies	Display information about the supplies currently installed in the printer. This includes the part number and serial number, additional codes that define the supply, and the percent of supply remaining in relation to a new full roll. Information displays for each module type.	View	View

Status Menu Option	Function	WebUser	WebAdmin
Audit Data	Display card printer usage data, including card counts (both resettable—shown with an r as the first letter of the name—and non-resettable counts) and error reporting collected by the printer. This page acts as a general overview for all the counters and can be useful to track card production activity and problem history.	View	View
Adapters	Display information about the IP addresses configured for the printer. The printer can have an IPv4 address and multiple IPv6 addresses configured concurrently. The page shows the IP address, network mask or IPv6 prefix, gateway address, and MAC address for each adapter.	View	View
WiFi	Display information about wireless connectivity if a Wi-Fi Dongle is installed in the printer.	View	View
About Printer Manager	Display the Printer Manager software version and copyright information.	View	View

Printer Setting Menu

Use the **Printer Setting** menu to view and customize printer settings.

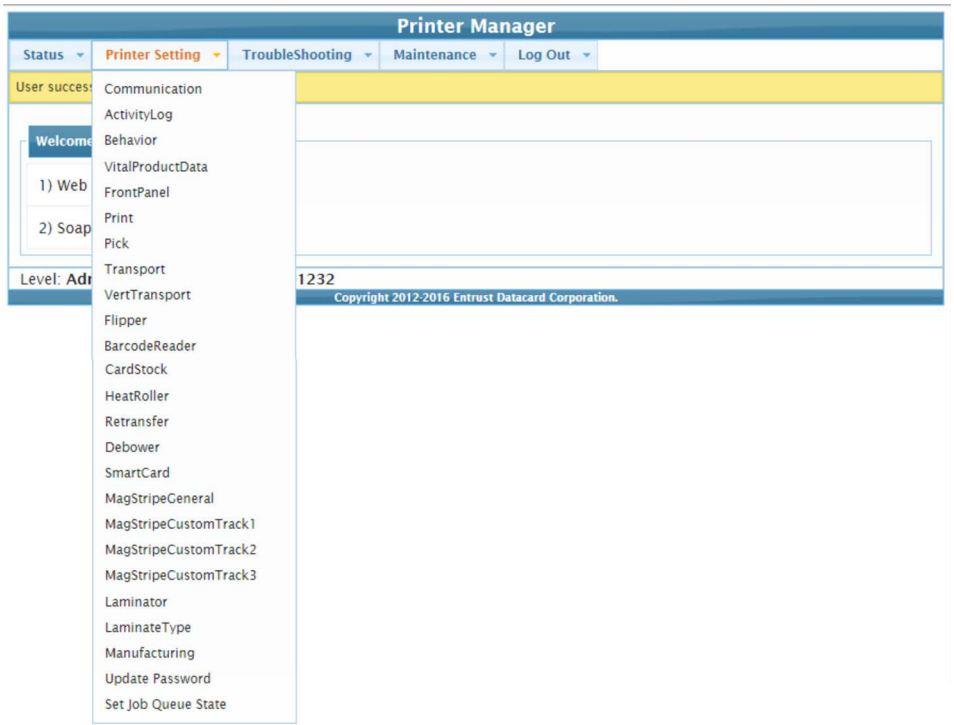

Printer Setting Menu Option	Function	WebUser	WebAdmin
Communication	Set or view the network address method used by the printer, including Cloud communication if it is enabled.	No	Change all Current Values
ActivityLog	Set values in the activity log to help isolate card production issues.	No	Change all Current Values
Behavior	Display printer operation and control methods.	No	Change all Current Values
VitalProductData	Change printer information. Available to WebService access level users only.	No	No

Printer Setting Menu Option	Function	WebUser	WebAdmin
FrontPanel	Set front panel values for the printer.	Change Backlight Brightness, KeySenseLevel and SpeakerEnabled values	Change all Current Values
Print	Select color mode and color profile settings, and set the supply rewind timeout period.	No	Change all Current Values
Pick	Display and set pick values. Most settings are available to WebService access level users only.	No	Change: SuppliesRequired
Transport	Specify card transport values and display the transport motor speed. and set card ejection values.	View only: TransMedSpeedMM	View only: TransMedSpeedMM Change other Current Values
VertTransport	Display the speed at which the vertical transport motor runs when clearing errors.	No	View: VertTransMedSpeed
Flipper	Set the reject tray capacity and values for the duplex module in duplex-option printers. Most settings are available to WebService access level users only.	No	Change: RejectHopper Capacity
BarcodeReader	Set the offset values for positioning a card to be read by the bar code reader.	No	Change all Current Values
HeatRoller	Set time and temperature values for the heated roller.	Change all Current Values	Change all Current Values

Printer Setting Menu Option	Function	WebUser	WebAdmin
Retransfer	Set values for the retransfer process.	No	Change all Current Values
Debower	Set values for the debow action after the image has been transferred to the card. Available to WebService access level users only.	No	No
SmartCard	Set values for the smart card module in the printer. Available to WebService access level users only.	No	No
MagStripeGeneral	Set magnetic stripe options including coercivity, custom magnetic stripe formats, and data formats.	No	Change all Current Values
MagStripeCustomTrack1	Set customized magnetic stripe values for track 1.	No	Change all Current Values
MagStripeCustomTrack2	Set customized magnetic stripe values for track 2.	No	Change all Current Values
MagStripeCustomTrack3	Set customized magnetic stripe values for track 3.	No	Change all Current Values
CleaningCard	Set standard or enhance vertical cleaning.	No	Yes
Multihopper	Available to WebService access level users only. This option displays only when a multi-hopper is attached to the printer.	No	No

Printer Setting Menu Option	Function	WebUser	WebAdmin
Laminator	Specify laminator settings. This option displays only when a laminator is attached to the printer.	Change all Current Values	Change all Current Values
LaminateType	Specify overlay settings. This option displays only when a laminator is attached to the printer.	Change all Current Values	Change all Current Values
Impresser	Specify settings for the tactile impression module. This option displays only when an impresser is connected to the printer.	Change HeaterOff AfterInactiveTime	Change all Current Values
Manufacturing	Available to WebService access level users only.	No	No
WifiNetworkStationSetup	Set Wi-Fi values. This option displays only when a Wi-Fi Dongle is installed in the printer.	No	Change all Current Values
WifiModes	Enable or disable wireless communication. This option displays only when a Wi-Fi Dongle is installed in the printer.	No	Change all Current Values
Update Password	Set or update passwords for the WebUser and WebAdmin access levels.	No	Change WebUser and WebAdmin passwords

Printer Setting Menu Option	Function	WebUser	WebAdmin
Certificates	Manage custom TLS printer certificate.	No	Install or remove a custom TLS certificate
Set Job Queue State	Enter values for shipping the printer to a repair facility, or when securing the printer to perform troubleshooting, maintenance, or other procedures. This setting is used primarily by financial printers. Contact your service provider for more information.	Requires a password	Requires a password

Communication

Use the **Communication** settings to specify the network address method used by the printer.

Description	Default Value	Current Value (unit)	Allowed Range
CloudLocationCustomURI			
CloudMQTTKeepAlive	40	40	[1 – 59]
CloudMQTTPort	8883	8883	
CloudMQTTReceiveTopic			[1 – 65535]
CloudMQTTSocks5Host			
CloudMQTTSocks5Password			
CloudMQTTSocks5Port	3301	3301	[1 – 65535]
CloudMQTTSocks5Username			
EthAddressMethod	DHCP	DHCP	
EthDnsAddress1	0.0.0.0	0.0.0.0	
EthDnsAddress2	0.0.0.0	0.0.0.0	
EthDnsSearchSuffix			
EthGatewayAddress	0.0.0.0	0.0.0.0	
EthIpAddress	0.0.0.0	0.0.0.0	
EthSubnetMask	0.0.0.0	0.0.0.0	
IEEE8021XAnonymousIdentity			
IEEE8021XIdentity			
IEEE8021XPassword			
IPv6DefaultGateway	::	::	
IPv6DHCPv6Select	Enabled	Enabled	
IPv6DNSPrimaryAddress	::	::	

Description	Default Value	Current Value (unit)	Allowed Range
IPv6DNSSecondaryAddress	::	::	
IPv6ManualAddress	::	::	
IPv6ManualPrefixLength	64	64	[0 – 128]
IPv6ManualSelect	Disabled	Disabled	
IPv6StatelessAddrSelect	Enabled	Enabled	
TLSEncryptAllCardData	Enabled	Enabled	

- The Cloud settings are supported only by certain Entrust software applications. Refer to your application documentation for information about using the cloud functions. Refer to "Behavior" on page 95 for information about enabling Cloud support.
- You can see the status of the Cloud connection using the printer LCD panel **Status** menu.

- **CloudLocationCustomURI**—Enter the URI to the cloud broker computer.
- **CloudMQTTKeepAlive**—Specify the maximum time (in seconds) for no communication between the cloud client (the printer) and the cloud broker. If the specified time is exceeded, the client must take action to determine if the connection to the broker is still active
- **CloudMQTTPort**—The port to use for cloud communication.
- **CloudMQTTReceiveTopic**—A list of optional topics, separated by semicolons, to subscribe to.
- **CloudMQTTSocks5Host**—Enter the IP address of the Socks5 proxy server.
- **CloudMQTTSocks5Password**—Enter the account password for the Socks5 proxy server.
- **CloudMQTTSocks5Port**—Enter the port number for the Socks5 proxy server.
- **CloudMQTTSocks5Username**—Enter the account name for the Socks5 proxy server.

- **EthAddressMethod**—The method used to obtain the IPv4 network IP address. Select **DHCP** or **STATIC** from the Current Value drop-down list.
  - When the value is DHCP, the **EthGatewayAddress**, **EthIpAddress**, and **EthSubnetMask** values are controlled by the DNS server and the settings are filled in automatically.
  - When the value is STATIC, the **EthGatewayAddress**, **EthIPAddress**, and **EthSubnetMask** values must be set manually.
    - **EthGatewayAddress**—Enter the gateway address for the Ethernet network.
    - **EthIpAddress**—Enter the static IP address for the printer.
    - **EthSubnetMask**—Enter the subnet mask for the Ethernet network.
    - **EthDnsAddress1**—Enter the dns address 1 for the Ethernet network.
    - **EthDnsAddress2**—Enter the dns address 2 for the Ethernet network.
    - **EthDnsSearchSuffix**—Enter the dns search suffix for the Ethernet network.
- **IEEE8021XAnonymousIdentity**—Optional password used to encrypt communication before exchanging the authentication identity and password.
- **IEEE8021XIdentity**—User name for the authorized network account.
- **IEEE8021XPassword**—Password for the authorized network account.
- **IPv6DefaultGateway**—Set a default gateway address. This setting is disabled when set to the default of "::".
- **IPv6DHCPv6Select**—Select whether or not the printer obtains an address and stateful configuration from a DHCPv6 server. Disable this setting if a DHCPv6 server is not present.
- **IPv6DNSPrimaryAddress, IPv6DNSSecondaryAddress**—These settings are not used at this time.
- **IPv6ManualAddress**—Enter the IPv6 address using the following format: xxxx:xxxx:xxxx:xxxx:xxxx:xxxx:xxxx:xxxx

  Refer to "Access Printer Manager" on page 79 for more information about entering an IPv6 address.

  IPV6ManualSelect must be set to **Enabled** for the printer to use this setting.
- **IPv6ManualPrefixLength**—Specify the IPv6 manual subnet prefix length. IPv6 addresses consist of two parts. The prefix length indicates the boundary between the subnet to which the host is connected and device ID in the IPv6 manual address, starting from the left end. The default value is 64.

- **IPv6ManualSelect**—Enable the printer to use the manual address specified in **IPv6ManualAddress**. If this setting is disabled, the manual address information specified for the printer is retained, but is not used.
- **IPv6StatelessAddrSelect**—Enable the printer to allow the router to provide one or more network prefixes used for stateless automatic address configuration (SLAAC).
- **TLSEncryptAllCardData** - Enable to require that all card data exchanged over the network is encrypted with TLS v1.2 or TLS v1.3.

To modify the Communications settings:

1. Enter your changes in the **Current Value** fields.
2. Click **Set Current** to apply the changes.
3. Restart the printer.
4. Retrieve the new IP address from the front LCD panel of the printer.

ActivityLog

The **ActivityLog** settings allow you to record technical information about the printer. WebAdmin or WebService access-level users can change settings in the activity log to help troubleshoot and isolate a card production problem. You specify the types of actions to include in the logs and set the severity level for when the action should be written to the log. Filter severity level options are: Critical, Error, Warning, Notice, Information, Debug, Disabled.

Description	Default Value	Current Value (unit)
ExternalLog	Disabled	Disabled
ExternalLogServer	0.0.0.0	0.0.0.0
FilterCardActions	Notice	Notice
FilterConfigChanges	Notice	Notice
FilterJobStates	Notice	Notice
FilterSoapMsgs	Notice	Notice
FilterSystem	Notice	Notice
InternalLog	Enabled	Enabled

- **ExternalLog**—Enable or disable writing the activity log to an external Syslog server.
- **ExternalLogServer**—Specify the IP address of the external Syslog server if you are writing to an external log (ExternalLog is set to Enabled).
- **FilterCardActions**—Write the start and completion of a card action with the specified severity, and higher, to the activity log.
- **FilterConfigChanges**—Write configuration change actions with the specified severity, and higher, to the activity log.
- **FilterJobStates**—Write changes to the state of a print or exception job with the specified severity, and higher, to the activity log.
- **FilterSoapMsgs**—Write DPCL/Soap (Simple Object Access Protocol) messages from the printer with the specified severity, and higher, to the activity log.
- **FilterSystem**—Write system information with the specified severity, and higher, to the activity log. A value of Information results in most events being written to the log.

- **InternalLog**—Enable or disable the activity log on the printer.

We recommend that you operate at all default logging settings to reduce unnecessary logging for typical printer operations.

Activity Log Example:

Change the FilterJobStates status recorded in the activity log to help isolate a card production problem.

1. Select **Printer Setting > Activity Log**.
2. Set **FilterJobStates** to **Error** from the drop-down list. Changes to the state of a job, with this severity and higher, are written to the activity log.
3. Click **Set Current** to apply the changes.

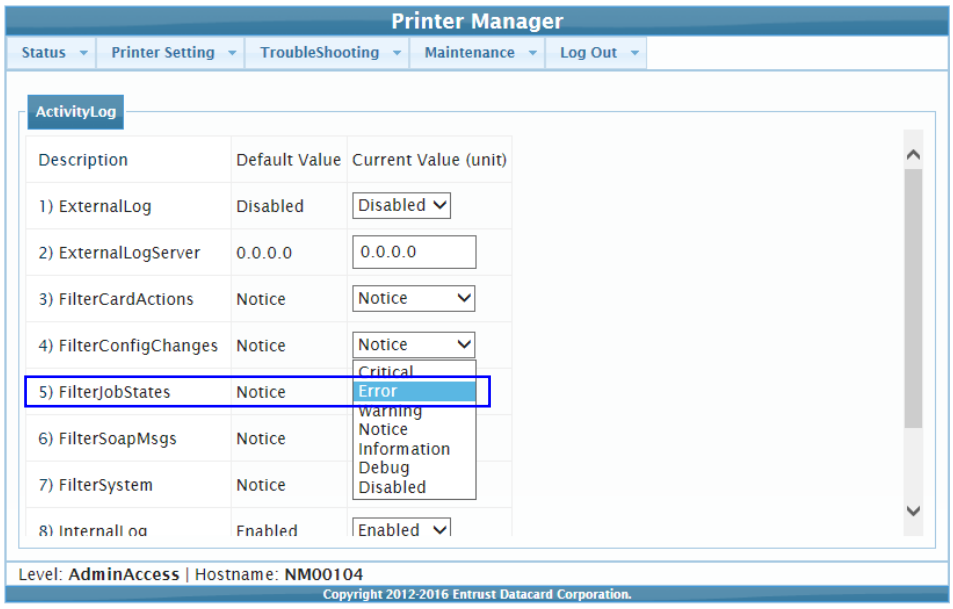

Behavior

Use the Printer Setting menu **Behavior** settings to control printer operation.

Description	Default Value	Current Value (unit)	Allowed Range
ActivityLogExternal	Enabled	Enabled	
ActivityLogInternal	Enabled	Enabled	
AutoPPS	Enabled	Enabled	
CloudConnection	Disabled	Disabled	
CloudLocation	IFICloudUS	IFICloudUS	
ContactAutoDetect	Disabled	Disabled	
ContactlessATRMode	Legacy	Legacy	
DoorCloseLockTimeout	5	5	[0 – 15]
LegacyIFIApplicationSupport	Disabled	Disabled	
RejectCardLocation	Automatic	Automatic	
Remake	Enabled	Enabled	
RemakeMethod	Conserve Supplies	Conserve Supplies	
ReportErrOnCleaningCard Required	Disabled	Disabled	
RetrieveDataTimeout	120	120	[0 – 120]
SmartcardDefaultShareMode	Direct	Direct	
SmartCardFirmwareVersion	AutoUpdate	AutoUpdate	
SmartcardForceProtocol	Disabled	Disabled	
SmartcardPostConnectDelay	400	400	[0 – 5000]
SmartcardSwitchModeDelay	3000	3000	[0 – 5000]
UnlockTimeout	30	30	
WebServerSecure	Enabled	Enabled	

Update Current Values as needed, and then click **Set Current** to apply the changes.

- **ActivityLogExternal**—Enable or disable writing the activity log to an external server.
- **ActivityLogInternal**—Enable or disable the internal activity log.
- **AutoPPS**— Enable or disable the automatic PPS negotiation done by the Duali reader to communicate with the chip at higher baud rates.
- **CloudConnection**—Enable or disable printer Cloud support.

  You also can enable Cloud support using the printer LCD panel **Configuration** menu.

- **CloudLocation**—Select the region of the Cloud connection.
- **CloudPushNotification**—Enable or disable printer Cloud push notification.
- **ContactAutoDetect**—This setting supports legacy smart card clients. It overrides the smart card protocol sent by the client to the printer and uses SCARD_PROTOCOL_T0_OR_T1. The setting is set to **Disabled** by default.
- **ContactlessATRMode**—Select the default ATR mode for the DUALi contactless smart card reader. The possible values are:
  - **Vendor**—Uses the ATR mode specified by the vendor. The generated ATR may not be compatible with all smart card applications or card types.
  - **PCSC**—Uses the PC/SC protocol to generate the ATR.
  - **CCID**—Uses the CCID protocol to generate the ATR.
  - **Legacy**—Uses the ATR mode currently in use by the reader. This is the default value.
  - **AppSpecifies**—Allows the smart card application to control the ATR mode.

  A smart card application may specify to receive the ATR in a different format regardless of this setting. However, when the printer restarts, the smart card reader returns to the setting specified here. Consider whether you want to specify the format on a job-by-job basis or modify the Printer Manager setting to use the desired ATR format.

- **DoorCloseLockTimeout**—The number of seconds after all printer doors are closed before the printer is locked. The timeout period starts when all the doors are closed. Use this setting to override the default lock timeout period, which starts when the printer is unlocked electronically from an application. This setting does not apply if you use a key to unlock the printer.
- **LegacyIFIApplicationSupport**— When enabled, allows client applications that do not support Peeloff to behave as if Inhibitor supplies are loaded.

- **RejectCardLocation**—Specify where to place rejected cards. You can select from the following options:
  - **Automatic:** Rejected cards are placed in the reject tray. This is the default setting.
  - **OutputHopper:** Rejected cards are placed in the output hopper.

  If the system includes an additional component, such as a laminator, rejected cards are placed in the component reject tray and the RejectCardLocation setting does not apply.

- **Remake**—Enable or disable card remakes. If Remake is set to Enabled and a print request fails, the print request is tried again with a new card. A card is retried only once.
- **RemakeMethod**—Select the card remake method. This setting does not display if Remake is set to Disabled.
  - Select **ConserveSupplies** to reprint the card out of queue order.
  - Select **PreserveOrder** to reprint the card in queue order.
- **RetrieveDataTimeout**—Specify the time period during which card data can be retrieved. You can specify from 0 to 120 seconds. If the Current Value is 0, data is not retrieved.
- **SmartcardDefaultShareMode**—Specify the share mode used by an application for the smart card reader. You can select from the following options:
  - **Direct:** The application allocates the smart card reader for its private use and controls it directly. No other application is allowed to access the reader. This is the default setting.
  - **Shared:** The application can share the smart card reader with other applications. Some applications may require that the smart card reader is shared.
  - SmartCardFirmwareVersion
- **SmartcardForceProtocol**—The smart card reader normally auto-detects the protocol to use to communicate with the smart card chip. However, if a smart card application changes protocols, the smart card reader may continue to try to communicate using the previous protocol. Use this setting to override auto-detection of the communication protocol, if necessary. You can select from the following options:
  - **Disabled:** No override, the smart card reader auto-detects the protocol to use. This is the default setting.
  - **T0:** Force the protocol to T=0 (asynchronous half-duplex byte transmission).

- **T1:** Force the protocol to T=1 (asynchronous half-duplex block transmission protocol).

- **SmartcardPostConnectDelay**—The number of milliseconds to wait after the smart card reader connects or reconnects before sending the next command. This setting applies only to Duali single-wire smart card readers.
- **SmartcardSwitchModeDelay**—The number of milliseconds to wait after the share mode is switched to give the smart card reader time to switch modes before attempting communication. This setting applies only to Duali single-wire smart card readers.
- **UnlockTimeout**— Number of seconds to hold the locking mechanism in the unlocked position before returning to the locked position.
- **WebServerSecure**—Enable or disable access to Printer Manager (the web server) through the secure port.

  Caution: Do not disable WebServerSecure. If the web server is disabled, you cannot launch Printer Manager and configuration changes cannot be made. To reverse this action, you must contact Entrust. To restrict access for the WebAdmin access level, select **Printer Setting > Update Password** and specify a password. Refer to "Update Password" on page 133.

VitalProductData

The **VitalProductData** settings allow WebService access level users to change information about the printer or system in specific circumstances. Contact your service provider should it become necessary to modify the VitalProductData settings.

FrontPanel

Use the **FrontPanel** settings to customize the printer front panel.

Description	Default Value	Current Value (unit)	Allowed Range
BacklightBrightness	100	100	[0 – 100]
KeySenseLevel	5	5	[0 – 10]
LcdConfigMenu	Enabled	Enabled	
LedCardsPickedToCleaning	500	500	[0 – 1000000]
LedPrintheadCyclesToCleaning	2500	2500	[0 – 1000000]
LedRibbonLow	10	10	[0 – 1000000]
SpeakerEnabled	Enabled	Enabled	

Change the front panel settings as needed, and then click **Set Current** to apply the changes.

- **BacklightBrightness**—Set the LCD front panel backlight brightness at the desired level, from **0** percent (no backlight) to **100** percent (bright).
- **KeySenseLevel**—Set the front panel key sensitivity to a comfortable level. Select from **0** (low sensitivity, almost a press) to **10** (high sensitivity, barely a touch).
- **LcdConfigMenu**—Enable or disable access to the Configuration menu on the LCD panel menu system. (The Status and Maintenance menus cannot be disabled.)
- **LedCardsPickedToCleaning**—Set the number of cards to pick between required cleaning. The card light blinks amber when the printer reaches this value. If this value is set to 0, cards between cleaning are not tracked. Best practices recommend that you clean the printer each time you change the ink ribbon, or more often depending on your environment or if the print quality diminishes.
- **LedPrintheadCyclesToCleaning**—Set the number of printhead cycles between required cleaning. The card light blinks amber when the printer reaches this value. If this value is set to 0, cycles between cleaning are not tracked.
- **LedRibbonLow**—Set the percentage of ribbon remaining before being notified that the ribbon is low and should be changed. The ribbon light blinks amber when the ribbon reaches this value.
- **SpeakerEnabled**—Enable or disable the external printer speaker. The speaker provides a sound in addition to the front panel lights and LCD text.

Print

Use the **Print** menu to select a color mode and color management profile for printing. You also can specify the time the printer is idle before the ink ribbon and retransfer film are rewound to protect them from accumulating dust.

Description	Default Value	Current Value (unit)	Allowed Range
CMSMode	Current	Current	
ColorMode	TrueColor (ICC)	TrueColor (ICC)	
FilmPreregisterProcess	Original	Original	
KPanelObscuration OverrideEnable	None	None	
TimeoutRewindSupply	0	0	[0 – 120]

Change settings as needed, and then click **Set Current** to apply the changes.

- **CMSMode**—Specify the color management profile the printer should use. Possible values are:
  - **Current:** Use the color management profile specified by the current firmware version. When **CMSMode** is set to **Current**, the **CMSEmulationMode** setting is not used. This is the default setting.
  - **Emulation:** Use the color management profile specified by the **CMSEmulationVersion** setting.

- **ColorMode**—Select the color mode that best defines the color printing requirements for your site. You can select from the following:
  - **TrueColor (ICC).** Uses a color profile that has been calibrated to closely match the output produced by the Entrust Artista® VHD Retransfer Color Printing Module Gen 2.
  - **Legacy SR/CR.** Processes the input colors to provide print output that is similar to that produced by Entrust SR200/SR300/CR500 card printers. The printed card will not be identical because of differences in the print resolution and canvas size used by the CR805 printer. You may need to modify your existing card designs to produce the optimal output.
  - **Legacy SR300 LUT.** Processes the input colors to provide print output that is similar to that produced by the Entrust SR300 card printer when it uses a color lookup table (LUT).
  - **Vivid.** Produces darker, more saturated color on the printed card. It is based on the TrueColor (ICC) setting.
  - **Adobe RGB.** Uses the Adobe RGB colors.
- **FilmPreregisterProcess**—Sets the location of the retransfer film index mark at initialization and at the end of a print job. Possible values are:
  - **Original:** The retransfer film index mark is positioned so that it does not block the film sensor.
  - **StopOnIndexMark:** The retransfer film index mark is positioned so that it blocks the film sensor. Primerless ribbon always uses the StopOnIndexMark value to reduce wrinkling in the retransfer film.
- **KPanelObscurationOverrideEnable**— Configure system to always obscure K panel on the side(s) of the card specified.
- **TimeoutRewindSupply**—Specify the number of minutes of idle time before the printer rewinds the ink ribbon and retransfer film to protect them from dust. If the ribbon and retransfer film are left exposed, a static charge on the supplies attracts dust from the air. The printer rewinds the ink ribbon and retransfer film at the end of the specified time. The supplies unwind again when the next card is sent to the printer. The default setting of zero (0) minutes turns off the rewind process. The rewind does not occur if a job is running or the printer door is open.

  Contact your service provider for more information about when to use the supply rewind feature and recommended settings.

  Using the supply rewind feature can reduce the number of cards printed with a ribbon.

Pick

The **Pick** settings define how cards are picked from the input hopper. Most **Pick** settings are available for WebService access-level users only. Contact your service provider for information about changing the printer's pick settings.

WebAdmin access-level users can specify whether the pick action fails when supplies are not installed in the printer or if a supply has an error condition. The setting also prevents the printer from producing a blank card if the supply information is not valid. WebAdmin users also can specify whether a warning message displays if the card stock is not compatible with the primerless ink ribbon.

Description	Default Value	Current Value (unit)
SuppliesRequired	Enabled	Enabled

Change the setting, as needed, and then click **Set Current** to apply the change.

- **SuppliesRequired**—Specify if the pick action succeeds or fails when supplies are removed from the printer. Possible values are:
  - **Enabled:** The pick action fails if either one or both of the supplies (ink ribbon and retransfer film) are not installed in the printer. The pick action also fails if the supplies are installed but one supply has an error condition.
  - **Disabled:** The pick action succeeds if one or both of the supplies are removed. However, the pick action fails if an installed supply has an error condition.

Transport

The **Transport** settings control card travel through the printer.Most settings are available for WebService access-level users only. WebAdmin users can set values for ejecting a card from the printer

Description	Default Value	Current Value (unit)	Allowed Range
EjectTries	3	3	[1 – 4]
FinalEjectSpeed	Normal	Normal	

Change settings as needed, and then click **Set Current** to apply the changes.

- **EjectTries**—Specify the number of attempts (automatic retries) the printer makes to eject a card though the output hopper. The first attempt to eject a card uses the speed specified in the WebService **TransportSpeedMM** setting. Subsequent attempts use the value specified in **FinalEjectSpeed**.

  A value of 0 specifies that the printer does not check if the card was ejected and does not make additional attempts to eject the card.

- **FinalEjectSpeed**—Select the speed at which to eject cards. Possible values are:
  - **Normal:** The speed used to eject a card is 125 motor steps/second. This is the default value specified in **TransportSpeedMM**.
  - **High:** The speed used to eject a card is 138 motor steps/second.

VertTransport

The **VertTransport** setting controls the speed at which the vertical transport motor runs when clearing errors.

Description	Default Value	Current Value (unit)	Allowed Range
VertTransMedSpeed	67.733	67.733	[25.4 – 200.0]

- **VertTransMedSpeed**—The speed at which the vertical transport motor runs when clearing errors. You cannot change this value.

Flipper

The **Flipper** settings define values for the duplex module in duplex-option printers. Most Flipper settings are available for WebService access-level users only. Contact your service provider for assistance if you need to change the printer's flipper settings.

WebAdmin access-level users can specify the number of cards that are allowed in the reject tray before an error is issued.

Description	Default Value	Current Value (unit)	Allowed Range
RejectHopperCapacity	6	6	[5 – 15]

Change the setting, as needed, and then click **Set Current** to apply the change.

- **RejectHopperCapacity**—The number of cards allowed in the printer reject tray before the reject tray full message is issued. The capacity of the reject hopper depends on the thickness of the card stock being used.

If the system includes an additional component, such as a laminator, rejected cards are placed in the component reject tray and the RejectHopperCapacity setting does not apply.

BarcodeReader

The **BarcodeReader** settings define values for the optional bar code reader used by some printers to read and verify the bar code on pre-serialized cards. The bar code location can vary, depending on the card. These settings allow you to adjust the imaging position for the bar code so that it can be read.

Description	Default Value	Current Value (unit)	Allowed Range
LeadingCardEdgeTo BarcodeMM	2.9	2.9	[0 – 50.0]
SensorToLeadingCard EdgeMM	37.0	37	[30.0 – 44.0]

Change the settings, as needed, and then click **Set Current** to apply the change.

- **LeadingCardEdgeToBarcodeMM**—The distance, in millimeters, from the leading edge of the card to the beginning of the bar code. The printer uses this value to position the card so the bar code is within the imaging area. Enter a value of 50 if the measured distance to the bar code is greater than 50 mm.

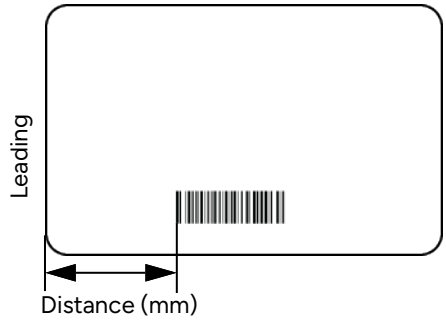

- **SensorToLeadingCardEdgeMM**—The distance, in millimeters, from the card sensor to the leading edge of the card. Use the default value unless directed otherwise by technical support.

HeatRoller

The **HeatRoller** settings specify the time the printer is idle before it reduces its temperature and when power to the heated roller is turned off.

Description	Default Value	Current Value (unit)	Allowed Range
HeaterMinutesToLowPower	5	5	[0 – 240]
HeaterMinutesToPowerSave	15	15	[0 – 240]
LowPowerRollerTemp	135	135	[20 – 160]

Change settings as needed, and then click **Set Current** to apply the changes.

- **HeaterMinutesToLowPower**—The number of minutes the printer is idle before the heated roller reduces its temperature to the value specified in the **LowPowerRollerTemp** setting. (The heated roller is turned off after the time specified in **HeaterMinutesToPowerSave**.)
- **HeaterMinutesToPowerSave**—The number of minutes of printer idle time before the heated roller is turned off. After waiting the specified number of minutes, the roller is allowed to cool down. A value of 0 allows the roller to start cooling down immediately.

  Using power save requires a brief warm-up period before the printer is ready to print cards again. The front panel LCD displays the message **Busy Warming up** and a percentage that indicates the status of the heated roller.
- **LowPowerRollerTemp**—The temperature to which the heated roller is lowered after the number of minutes of idle time specified in **HeaterMinutesToLowPower**.

Retransfer

The **Retransfer** settings define values for the retransfer process.

Description	Default Value	Current Value (unit)	Allowed Range
BacksideCoolingDelay	0	0	[0 – 120]
DirectPeelLamination Speed	15.0	15.0	[10.0 - 34.0]
EmbosserHandoffCooling Delay	0	0	[0 – 120]
LaminatorHandoffCooling Delay	0	0	[0 – 120]
RetransferCoolTime	0	0	[0 - 10000]
RetransferLamination Speed	10.0	10	[10.0 - 34.0]
RetransferLamination SpeedLayer2	15.0	15	[10.0 - 34.0]
RetransferLamination SpeedLayer2Side2	15.0	15	[10.0 - 34.0]
RetransferLamination SpeedSide2	10.0	10	[10.0 - 34.0]
RetransferRollerTemp	155	155	[140 - 190]
RetransferRollerTempSide2	155	155	[140 - 190]
RetransferVersion	Version1	Version1	
SecondRetransferCooling Delay	20	20	[0 – 120]
V2RetransferLamination Speed	10.0	10	[10.0 - 34.0]
V2RetransferLamination SpeedLayer2	10.0	10	[10.0 - 34.0]
V2RetransferLamination SpeedLayer2Side2	10.0	10	[10.0 - 34.0]

Description	Default Value	Current Value (unit)	Allowed Range
V2RetransferLamination SpeedSide2	10.0	10	[10.0 - 34.0]
V2RetransferRollerTemp	175	175	[140 - 190]
V2RetransferRollerTemp Side2	175	175	[140 - 190]
V2SecondRetransferCoolin g Delay	0	0	[0 - 120]

Change settings as needed, and then click **Set Current** to apply the changes.

- **BacksideCoolingDelay**—The number of seconds that the card remains in the flipper to cool between front side and back side retransfer.
- **DirectPeelLaminationSpeed**—The speed at which to laminate during retransfer on 1st retransfer layer when using direct peel method.
- **EmbosserHandoffCoolingDelay**—The number of seconds the card remains in the printer before it is moved into the embosser. This allows the card time to cool before moving into the embosser. This setting applies only to systems with an embosser.
- **LaminatorHandoffCoolingDelay**—The number of seconds the card remains in the printer before it is moved into the laminator. This allows the card time to cool before moving into the laminator. This setting applies only to systems with a laminator.
- **RetransferCoolTime**—Time delay after retransfer to allow film to cool.
- **RetransferLaminationSpeed**—The speed at which to laminate during retransfer on 1st retransfer layer on side 1 for ALPS supplies.
- **RetransferLaminationSpeedLayer2**— The speed at which to laminate during retransfer on 2nd retransfer layer on side 1 for ALPS supplies.
- **RetransferLaminationSpeedLayer2Side2**—The speed at which to laminate during retransfer on 2nd retransfer layer on side 2 for ALPS supplies.
- **RetransferLaminationSpeedSide2**—The speed at which to laminate during retransfer on 1st retransfer layer on side 2 for ALPS supplies.
- **RetransferRollerTemp**—The heat roller temperature in degrees C at which to retransfer film to card on side 1. The heat roller will stay at the temperature.
- **RetransferRollerTempSide2**—The heat roller temperature in degrees C at which to retransfer film to card on side 2. The heat roller will stay at the temperature.

- **RetransferVersion**—The retransfer process used by the printer. Versions 1 and 2 are used when ribbons with a primer panel are installed in the printer. Printers with primerless ribbons always use Version 3, regardless of the version specified in this setting.
- **SecondRetransferCoolingDelay**—The number of seconds that the card is allowed to cool before a second layer of retransfer film is applied.
- **V2RetransferLaminationSpeed**—The speed at which to laminate during retransfer on 1st retransfer layer on side 1 for DNP supplies.
- **V2RetransferLaminationSpeedLayer2**—The speed at which to laminate during retransfer on 2nd retransfer layer on side 1 for DNP supplies.
- **V2RetransferLaminationSpeedLayer2Side2**—The speed at which to laminate during retransfer on 2nd retransfer layer on side 2 for DNP supplies.
- **V2RetransferLaminationSpeedSide2**—The speed at which to laminate during retransfer on 1st retransfer layer on side 2 for DNP supplies.
- **V2RetransferRollerTemp**—The heat roller temperature in degrees C at which to retransfer film to card on side 1 with Primerless. The heat roller will stay at the temperature.
- **V2RetransferRollerTempSide2**—The heat roller temperature in degrees C at which to retransfer film to card on side 2 with Primerless. The heat roller will stay at the temperature.
- **V2SecondRetransferCoolingDelay**—The number of seconds that the card is allowed to cool before a second layer of retransfer film is applied.

Debower

The heat from the retransfer process can cause the card to become bowed slightly. The debower returns the card to its proper shape. The **Debower** settings define values for the debow action performed after the image has been transferred to the card. Debower settings are available for WebService access-level users only. Contact your service provider for assistance if you need to change the printer's debower settings.

Cards are debowed after each retransfer operation.

SmartCard

The **SmartCard** settings define values for the smart card module in the printer. SmartCard settings are available to WebService access-level users only.

MagStripeGeneral

Magnetic stripe settings are available for WebAdmin and WebService access-level users to set up basic magnetic stripe options.

Description	Default Value	Current Value (unit)	Allowed Range
Attempts	3	3	[1 – 5]
Coercivity	HICO	HICO	
DataFormat1	IATA	IATA	
DataFormat2	ABA	ABA	
DataFormat3	TTS	TTS	
NoDataDisableTrack	Disabled	Disabled	
ReadTrack1	Enabled	Enabled	
ReadTrack2	Enabled	Enabled	
ReadTrack3	Enabled	Enabled	
SSA1	0	0	[-4 – 4]
SSA2	0	0	[-4 – 4]
SSA3	0	0	[-4 – 4]
StripeEncoderMultiplier	1.0	1	[0.9 – 1.1]
WriteTrack1	Enabled	Enabled	
WriteTrack2	Enabled	Enabled	
WriteTrack3	Enabled	Enabled	

Change settings as needed, and then click **Set Current** to apply the changes.

- **Attempts**—Specify the number of attempts (automatic retries) the printer makes to encode the magnetic stripe data. This value also is used for the number of times to attempt to read magnetic stripe data.

  If you set this number to a lower value, it increases the throughput of the printer but can decrease the reliability of magnetic stripe encoding.

  If you set the number to a higher value, it decreases the throughput of the printer but can increase the reliability of magnetic stripe encoding.

  A value of 1 means no retry attempts.

- **Coercivity**—Select the coercivity setting that matches the cards you are using. Coercivity measures the resistance of magnetic material to the removal of encoded data. High coercivity (HICO) requires more electrical force to encode data and the data is more resistant to magnetic interference. The choices are **HICO**, **LOCO**, **NTT1**, **NTT2**, **NTT3**.

- **DataFormat (1, 2, 3)**—Specify the names of the data formats used for tracks 1, 2, and 3.

  For single-track magnetic stripe encoding, set **DataFormat3** to **JIS** and **DataFormat1** and **DataFormat2** to **NONE**.

  To use a custom data format, define the formats for tracks 1, 2, and/or 3 using the **MagStripeCustomTrack (1, 2, 3)** settings and then set the corresponding **DataFormat** settings to **CUSTOM**.

- **NoDataDisableTrack**—Disable the magnetic stripe write head for a track if the track contains no data. When this is disabled, any track that was not given data is erased.

- **ReadTrack (1, 2, 3)**—Allow magnetic stripe read actions to read from tracks 1, 2, and 3.

- **SSA (1, 2, 3)**—Set the start sentinel adjustment for tracks 1, 2, and 3. (SSA3 also sets the start sentinel for a single track.) The start sentinel is encoded on the magnetic stripe immediately before the first data character and indicates the beginning of data. Enter a value from -4 to 4.

- **StripeEncoderMultiplier**—This value is information only and cannot be changed. It is determined when an SSA test is run.

- **WriteTrack (1, 2, 3)**—Allow magnetic stripe write actions to write to tracks 1, 2, and 3.

MagStripeCustomTrack 1–3

Custom magnetic stripe settings are available for WebAdmin and WebService access-level users to define custom magnetic stripe options.

Description	Default Value	Current Value (unit)	Allowed Range
CustomCharHigh	Track 1: 95 Tracks 2 & 3: 63	95 63	[0 – 255]
CustomCharLength	Track 1: 6 Tracks 2 & 3: 4	6 4	[1 – 8]
CustomCharLow	Track 1: 32 Tracks 2 & 3: 48	32 48	[0 – 255]
CustomCharMask	Track 1: 32 Track 2: 48	32 48	[0 – 255]
CustomCharMax	Track 1: 76 Track 2: 37 Track 3: 104	76 37 104	[0 – 255]
CustomDensity	Tracks 1 & 3: 210 Track 2: 75	210 75	[0 – 255]
CustomEndSentinel	63	63	[0 – 255]
CustomLrc	EVEN	EVEN	
CustomParity	ODD	ODD	
CustomSdsNulls	0	0	[0 – 255]
CustomSdsRecords	1	1	[0 – 255]
CustomSdsSs	1	1	[0 – 255]
CustomStartSentinel	Track 1: 37 Tracks 2 & 3: 59	37 59	[0 – 255]

Change settings as needed, and then click **Set Current** to apply the changes.

- **CustomCharHigh**—Specify the numeric value of the highest ASCII character supported for input data on the track.
- **CustomCharLength**—Set the number of bits to represent one character of data on the track, also called bits per character.
- **CustomCharLow**—Specify the numeric value of the lowest ASCII character supported for input data on the track.
- **CustomCharMask**—Specify the mask value that is subtracted from the ASCII numeric value to get the encoded value.
- **CustomCharMax**—Specify the maximum number of data characters for the track. The value does not include the start sentinel or end sentinel.
- **CustomDensity**—Specify the number of data bits per inch of magnetic stripe media for the track, also called bits per inch or bpi. Allowed values are 75 bpi or 210 bpi.
- **CustomEndSentinel**—Specify the last character encoded, which identifies the end of encoded data for the track.
- **CustomLrc**—Specify a cumulative parity bit that is encoded after the end sentinel to provide simple error checking. Allowed values are EVEN, ODD, and NONE.
- **CustomParity**—Specify a character-level parity bit encoded after each character to provide simple error checking. Allowed values are EVEN, ODD, and NONE.
- **CustomSdsNulls**—The number of nulls between each copy of the data record. You should not change this value.
- **CustomSdsRecords**—The number of times to encode the data record. You should not change this value.
- **CustomSdsSs**—The number of start sentinels before each data record. You should not change this value.
- **CustomStartSentinel**—Specify the first character encoded, which identifies the start of the encoded data for the track.

Using custom magnetic stripe data formats is a two-step process. First, define the custom tracks using **MagStripeCustomTrack1**, **MagStripeCustomTrack2**, and **MagStripeCustomTrack3**. Second, apply the custom track using the settings on the MagStripeGeneral menu.

1. To use the defined custom track:
   a. Open the **MagStripeGeneral** menu.
   b. Select Custom for **DataFormat1**, **DataFormat2**, or **DataFormat3** to use the custom track.
      - MagStripeCustomTrack1 corresponds to DataFormat1
      - MagStripeCustomTrack2 corresponds to DataFormat2
      - MagStripeCustomTrack3 corresponds to DataFormat3
2. Click **Set Current** to apply the changes.

CleaningCard

The **CleaningCard** category is available for WebAdmin and WebService access-level users to change the behavior of the cleaning card process.

Description	Default Value	Current Value (unit)
CleaningProcess	Standard	Standard

Change settings as needed, and then click **Set Current** to apply the changes.

- **CleaningProcess**—Choice of cleaning style: Standard or EnhancedVertical for additional cleaning when running a cleaning card.

Laminator

The **Laminator** settings let you specify values when using a laminating system.

The Laminator setting displays in the Printer Setting menu only when a laminator is attached to the printer.

Description	Default Value	Current Value (unit)	Allowed Range
DebowDelay	1000	1000	[0 – 1500]
ExceptionCardDebow Direction	Down	Down	
ExceptionCardDebow DistanceDown	15	15	[0 – 150]
ExceptionCardDebow DistanceUp	105	105	[0 – 150]
ExceptionCardDebow DwellMs	1000	1000	[0 – 5000]
ExceptionCardImpress Depth	0	0	[-250 – 250]
ExceptionCardImpress DwellTime	2000	2000	[0 – 10000]
ExceptionCardImpress PositionOffset1	2000	2000	[0 – 4000]

Description	Default Value	Current Value (unit)	Allowed Range
ExceptionCardImpress PositionOffset2	2000	2000	[0 – 4000]
ExceptionCardImpress PositionOffset3	2000	2000	[0 – 4000]
ExceptionCardImpress Temperature	130	130	[50 – 160]
ExceptionCardNumber OfImpresses	1	1	[1 – 3]
HeaterMinutesToPower Save	15	20	[15 – 240]
HopperCardDebow Direction	Down	Down	
HopperCardDebow DistanceDown	15	15	[0 – 150]
HopperCardDebow DistanceUp	105	105	[0 – 150]
HopperCardDebow DwellMs	1000	1000	[0 – 5000]
HopperCardImpress Depth	0	0	[-250 – 250]
HopperCardImpress DwellTime	2000	2000	[0 – 10000]
HopperCardImpress PositionOffset1	2000	2000	[0 – 4000]
HopperCardImpress PositionOffset2	2000	1687	[0 – 4000]
HopperCardImpress PositionOffset3	2000	2725	[0 – 4000]
HopperCardImpress Temperature	130	130	[50 – 160]

Description	Default Value	Current Value (unit)	Allowed Range
HopperCardNumber OfImpresses	1	1	[1 – 3]
ImpresserMaterial	Overlay	Overlay	
ImpresserSpeed	893	893	[50 – 2000]
L1CoolingTime	0	0	[0 – 20000]
L2CoolingTime	1000	1000	[0 – 20000]
RetransferImpressDepth Offset	0	0	[-250 – 250]
RetransferImpressDwell TimeOffset	3000	3000	[-5000 – 5000]
RollerTypeInstalledL1	Standard	Rubber	
RollerTypeInstalledL2	Standard	Rubber	

Change settings as needed, and then click **Set Current** to apply the changes.

- **DebowDelay**—Specify the amount of time (in milliseconds) to wait before the debow action takes place if the card also is being impressed. This value is valid only if an impresser is installed in the laminator. Set this value to 0 if no delay is required.

Exception Card Settings

Use the following settings when an exception job is sent. These may differ from the settings specified for cards picked from an input hopper. For example, the card material may be different or you are laminating a preprinted card. You may need to laminate multiple cards to determine the best settings to use in your environment.

Exception Card Debow Settings:

- **ExceptionCardDebowDirection**—Set the direction of the debow action in the laminator to return the card to its proper shape after an overlay is applied. A card may become bowed slightly due to heat from the laminator.
  - **Down**—The debow arms in the laminator press down on the card.
  - **Up**—The debow arms press up on the card.

- **ExceptionCardDebowDistanceDown**—Set the amount (distance) to move the debow arms down. The value is in increments of the debow motor. (This value is used when **ExceptionCardDebowDirection** is set to **Down**.)
  - Increase the value to bend the card down more.
  - Decrease the value to bend the card down less.
- **ExceptionCardDebowDistanceUp**—Set the amount (distance) to move the debow arms up. The value is in increments of the debow motor. (This value is used when **ExceptionCardDebowDirection** is set to **Up**.)
  - Increase the value to bend the card up more.
  - Decrease the value to bend the card up less.
- **ExceptionCardDebowDwellMs**—Set the time, in milliseconds, the debow action is applied to a card. The default is 2000 ms (2 seconds).
  - Increase the value to apply the debow action longer.
  - Decrease the value to apply the debow action for less time.

Exception Card Impresser Settings:

- **ExceptionCardImpressDepth**—Set the depth of the impression on a card. The value is in steps of the impresser punch.
  - Increase the value to deepen the impression.
  - Decrease the value to lessen the impression.

You may need to adjust the card impress depth value based on the card material and overlay type used.

- **ExceptionCardImpressDwellTime**—Set the time, in milliseconds, that the impresser remains in contact with the card. The default is 2000 ms (2 seconds).
  - Increase the value to allow the impresser to remain on the card longer.
  - Decrease the value to impress the card for a shorter time.
- **ExceptionCardImpressPositionOffset1**—Set the distance from the trailing edge of the card to the center of the first impression on the card.
  - Increase the offset value to increase the distance of the impression from the trailing edge of the card.
  - Decrease the offset value to decrease the distance of the impression from the trailing edge of the card.

- **ExceptionCardImpressPositionOffset2**—Set the distance from the trailing edge of the card to the center of the second impression on the card.
  - Increase the offset value to increase the distance of the impression from the trailing edge of the card.
  - Decrease the offset value to decrease the distance of the impression from the trailing edge of the card.
- **ExceptionCardImpressPositionOffset3**—Set the distance from the trailing edge of the card to the center of the third impression on the card.
  - Increase the offset value to increase the distance of the impression from the trailing edge of the card.
  - Decrease the offset value to decrease the distance of the impression from the trailing edge of the card.
- **ExceptionCardImpressTemperature**—Set the temperature of the impresser punch (in degrees Celsius).
  - Increase the value to increase the temperature of the impresser punch.
  - Decrease the value to decrease the temperature of the impresser punch.
- **ExceptionCardNumberOfImpresses**—Enter the number of impressions to be stamped on the card. The impresser can stamp up to three impressions in a row on the left, center, or right part of the card.
- **HeaterMinutesToPowerSave**—Set the number of minutes before the laminator and impresser heaters are turned off. After the specified number of minutes, the heaters are allowed to cool down. Using power save requires a warm-up period before the laminator is ready to laminate cards again. The front panel LCD displays the message **Busy Warming up** and a percentage that indicates the status of the heaters.

Hopper Settings

Use the following settings to specify values for cards picked from the input hopper. If a multi-hopper is installed, you can specify values for the cards in each hopper cartridge.

Hopper Debow Settings:

- **HopperCardDebowDirection** —Set the direction of the debow action in the laminator to return the card to its proper shape after an overlay is applied. A card may become bowed slightly due to heat from the laminator. You can set this value for each hopper cartridge in a multi-hopper.
  - **Down**—The debow arms in the laminator press down on the card.
  - **Up**—The debow arms press up on the card.

- **HopperCardDebowDistanceDown**—Set the amount (distance) to move the debow arms down. The value is in increments of the debow motor. (This value is used when **HopperCardDebowDirection** is set to **Down**.) You can set this value for each hopper cartridge in a multi-hopper.
  - Increase the value to bend the card down more.
  - Decrease the value to bend the card down less.
- **HopperCardDebowDistanceUp**—Set the amount (distance) to move the debow arms up. The value is in increments of the debow motor. (This value is used when **HopperCardDebowDirection** is set to **Up**.) You can set this value for each hopper cartridge in a multi-hopper.
  - Increase the value to bend the card up more.
  - Decrease the value to bend the card up less.
- **HopperCardDebowDwellMs**—Set the time, in milliseconds, the debow action is applied to a card. The default is 2000 ms (2 seconds). You can set this value for each hopper cartridge in a multi-hopper.
  - Increase the value to apply the debow action longer.
  - Decrease the value to apply the debow action for less time.

Hopper Impresser Settings:

- **HopperCardImpressDepth**—Set the depth of the impression on a card. The value is in steps of the impresser punch. You can set this value for each hopper cartridge in a multi-hopper.
  - Increase the value to deepen the impression.
  - Decrease the value to lessen the impression.

  You may need to adjust the card impress depth value based on the card material and overlay type used.

- **HopperCardImpressDwellTime**—Set the time, in milliseconds, that the impresser remains in contact with the card. The default is 2000 ms (2 seconds). You can set this value for each hopper cartridge in a multi-hopper.
  - Increase the value to allow the impresser to remain on the card longer.
  - Decrease the value to impress the card for a shorter time.

- **HopperCardImpressPositionOffset1**—Set the distance from the trailing edge of the card to the center of the first impression on the card. You can set this value for each hopper cartridge in a multi-hopper.
  - Increase the offset value to increase the distance of the impression from the trailing edge of the card.
  - Decrease the offset value to decrease the distance of the impression from the trailing edge of the card.
- **HopperCardImpressPositionOffset2**—Set the distance from the trailing edge of the card to the center of the second impression on the card. You can set this value for each hopper cartridge in a multi-hopper.
  - Increase the offset value to increase the distance of the impression from the trailing edge of the card.
  - Decrease the offset value to decrease the distance of the impression from the trailing edge of the card.
- **HopperCardImpressPositionOffset3**—Set the distance from the trailing edge of the card to the center of the third impression on the card. You can set this value for each hopper cartridge in a multi-hopper.
  - Increase the offset value to increase the distance of the impression from the trailing edge of the card.
  - Decrease the offset value to decrease the distance of the impression from the trailing edge of the card.
- **HopperCardImpressTemperature**—Set the temperature of the impresser punch (in degrees Celsius). You can set this value for each hopper cartridge in a multi-hopper.
  - Increase the value to increase the temperature of the impresser punch.
  - Decrease the value to decrease the temperature of the impresser punch.
- **HopperCardNumberOfImpresses**—Enter the number of impressions to be stamped on the card. The impresser can stamp up to three impressions in a row on the left, center, or right part of the card. You can set this value for each hopper cartridge in a multi-hopper.

- **ImpresserMaterial**—Specify the material on which an impression will be stamped. For example, you may want to impress directly on the retransfer film without applying an overlay to the card. The type of material determines the impresser settings used to impress the card.

  You can select from the following:

  - **Overlay:** The material is a laminate overlay. The impresser uses the **HopperCard** and **ExceptionCard** impress settings.
  - **RTM:** The material is the retransfer film. The impresser uses different dwell time, temperature, and depth settings from those used on a laminate overlay.

  Make sure that this setting specifies the correct material to be impressed. The job is canceled and message 245, "Configuration error" is issued if the **ImpresserMaterial** setting does not match the type of impress action sent to the laminator (if, for example, **ImpresserMaterial= Overlay**, but an overlay is not applied to the card, or **ImpresserMaterial=RTM**, but an overlay is applied). Using the wrong temperature can damage the impresser die.

- **ImpresserSpeed**—Set the speed of the impresser motor. The value is in increments of the motor.
  - Increase the value to increase the speed of the impresser motor.
  - Decrease the value to decrease the speed of the impresser motor.
- **L1CoolingTime**—Specify the time, in milliseconds, to wait for the card to cool after applying the overlay in the L1 laminator. The default is 0 (no delay).
- **L2CoolingTime**—Specify the time, in milliseconds, to wait for the card to cool after applying the overlay in the L2 laminator before proceeding to the L1 laminator. The default is 1000 ms (1 second). Enter 0 to turn off the delay.
- **RetransferImpressDepthOffset**—The depth that is added to the normal depth specified by **ExceptionCardImpressDepth** or **HopperCardImpressDepth** when impressing on retransfer film (**ImpresserMaterial** is set to **RTM**).
- **RetransferImpressDwellTimeOffset**—The time, in milliseconds, that is added to the normal dwell time (specified by **ExceptionCardImpressDwellTime** or **HopperCardImpressDwellTime**) when impressing on the retransfer film (**ImpresserMaterial** is set to **RTM**).
- **RollerTypeInstalledL1**—Specify the type of roller installed in the L1 laminator. The retransfer printer requires rubber rollers in the laminator.
- **RollerTypeInstalledL2**—Specify the type of roller installed in the L2 laminator. The retransfer printer requires rubber rollers in the laminator.

LaminateType

Use the **LaminateType** options to specify settings for the overlay materials used in the laminating system.

The LaminateType setting displays in the Printer Setting menu only when a laminator is attached to the printer.

Description	Default Value	Current Value (unit)	Allowed Range
DatabaseVersion	1	17	[1 – 999]
ExclusiveOverlayInL1		Disabled	
ExclusiveOverlayInL2		Disabled	
OverlayDisplayed Name		R1_mil_clear_DG_ms	
OverlayLoadedInL1 Name		R1_mil_Holo_DG_ reg	
OverlayLoadedInL2 Name		R1_mil_clear_DG_ms	
OverlayPartNumber	0	514910	
OverlaySpeed	160	170	[100 – 250]
OverlaySpeed AdjustmentL1	0	0	[-40 – 40]
OverlaySpeed AdjustmentL2	0	0	[-40 – 40]
OverlayTemp	160	170	[100 – 200]
OverlayTemp AdjustmentL1	0	0	[-20 – 40]
OverlayTemp AdjustmentL2	0	0	[-20 – 40]
UserOverlay1Name		None	
UserOverlay2Name		None	

Description	Default Value	Current Value (unit)	Allowed Range
UserOverlay3Name		None	
UserOverlay4Name		None	

Change settings as needed, and then click **Set Current** to apply the changes.

- **DatabaseVersion**—The version number of the overlay database currently installed in the laminator. This field is information only. The overlay database is an XML file that contains the supported overlay types and allows the laminator to identify the type of overlay loaded in each cartridge.
- **ExclusiveOverlayInL1**, **ExclusiveOverlayInL2**—Use these settings to enforce that a specified overlay type is loaded in the L1 or L2 laminators. The default value is **Disabled**, which allows any overlay to be loaded in the laminator cartridges. If you select an overlay name, the named overlay must be loaded in the specified cartridge or the job is canceled and a supply error is issued.
- **OverlayDisplayedName**—Select the name of the overlay whose settings you want to change. Click **Set Current** to apply the overlay selection. You must do this before making any changes to the overlay settings.

  The changes you make to the remainder of the settings on this page apply to the selected overlay type. The settings apply whenever the named overlay is loaded in the laminator.
- **OverlayLoadedInL1Name**—The name of the overlay type loaded in the L1 laminator cartridge. This information is obtained from the supply roll and cannot be changed. If the overlay name is the same as the overlay type selected in **OverlayDisplayedName**, the values you specify to the settings on this page apply to the overlay. If the overlay name is not the same, no changes are applied.
- **OverlayLoadedInL2Name**—The name of the overlay type loaded in the L2 laminator cartridge. This information is obtained from the supply roll and cannot be changed. If the overlay name is the same as the overlay type selected in **OverlayDisplayedName**, the values you specify to the settings on this page apply to the overlay. If the overlay name is not the same, no changes are applied.
- **OverlayPartNumber**—The part number of the overlay named in **OverlayDisplayedName**. This field is obtained from the supply roll and cannot be changed.
- **OverlaySpeed**—The default speed, in steps per second, at which to apply the overlay type named in **OverlayDisplayedName**. This value is obtained from the supply roll and cannot be changed. Make adjustments to the speed using the **OverlaySpeedAdjustment** settings.
- **OverlaySpeedAdjustmentL1**, **OverlaySpeedAdjustmentL2**—Adjust the speed at which to apply the overlay type named in **OverlayDisplayedName** when it is loaded in the specified cartridge. The speed adjustment is measured in steps per second of the motor that moves the card. Set the speed as the difference between the default speed value (shown in **OverlaySpeed**) and speed you want to use. Decrease the speed to improve how the overlay adheres to the card. For example, if the default is 160, and you want to set the speed to 150, enter -10.

- **OverlayTemp**—The temperature at which to apply the overlay type named in **OverlayDisplayedName**. This Current Value is obtained from the supply roll and cannot be changed. Make adjustments to the temperature using the **OverlayTempAdjustment** settings.
- **OverlayTempAdjustmentL1**, **OverlayTempAdjustmentL2**—Adjust the temperature at which to apply the overlay type named in **OverlayDisplayedName** when it is loaded in the specified cartridge. Enter the temperature adjustment as the difference between the Default Value and the recommended temperature obtained from the supply roll, both shown in **OverlayTemp**, to apply the selected overlay type.
  - Increase the temperature to improve how well the overlay adheres to the card.
  - Decrease the temperature to prevent wrinkling of the overlay.

  Each overlay type has a preferred temperature that allows it to best adhere to the card. For example, if the default temperature is 160 degrees Celsius, and the overlay type you are using runs at 175 degrees Celsius, enter 15.

  The **OverlaySpeed** and **OverlayTemp** settings work together to determine how well the overlay is applied. You might have to laminate several cards to find the speed and temperature settings that work best for your card type.

- **UserOverlay1Name**, **UserOverlay2Name**, **UserOverlay3Name**, **UserOverlay4Name**—These settings allow you to specify a user-defined name for an overlay type, based on the overlay named in **OverlayDisplayedName**. You then can override the settings for the specified overlay.

Multihopper

The **Multihopper** settings define values for the multi-hopper. **Multihopper** settings are available to WebService access-level users only.

The Multihopper option displays in the Printer Setting menu only when a multi-hopper is attached to the printer.

Impresser

The Impresser setting define values for the Tactile Impression Module (TIM) that can be installed on the printer.

Description	Default Value	Current Value (unit)	Allowed Range
FoillessDepthOffset	0	0	[-2000 – 2000]
FoillessDwellTimeOffset	0	0	[-1000 – 1000]
FoillessTemperatureOffset	0	0	[-200 – 200]
HeaterOffAfterInactiveTime	900	900	[0 – 65535]
ImpresserDieDwellTime	400	400	[0 – 2000]
ImpresserDieImpressDepth	1054	1054	[0 – 2000]
ImpresserDieTarget Temperature	130	130	[80 – 170]
ImpressPosition1	20.339	20.339	[12.39 – 73.21]
ImpressPosition2	45.779	45.779	[12.39 – 73.21]
ImpressPosition3	71.219	71.219	[12.39 – 73.21]
RetransferDepthOffset	0	0	[-2000 – 2000]
RetransferDwellTIme Offset	0	0	[-1000 – 1000]
RetransferTemperature Offset	10	10	[-200 – 200]
WhiteFoilDepthOffset	0	0	[-2000 – 2000]
WhiteFoilDwellTimeOffset	0	0	[-1000 – 1000]
WhiteFoilTemperature Offset	0	0	[-200 – 200]

Change settings as needed, and then click **Set Current** to apply the changes.

- **FoillessDepthOffset**—Specify the depth change to the **ImpresserDieImpressDepth** value. This value applies only to direct-to-card printers.
- **FoillessDwellTimeOffset**—Specify the dwell time change (in milliseconds) to the **ImpresserDieDwellTime** value. This value applies only to direct-to-card printers.

- **FoillessTemperatureOffset**—Specify the temperature change (in degrees Celsius) to the **ImpresserDieTargetTemperature** value. This value applies only to direct-to-card printers.
- **HeaterOffAfterInactiveTime**—The time (in seconds) with no impress activity before the impresser die heater turns off.
- **ImpresserDieDwellTime**—Set the time, in milliseconds, that the impresser die remains in contact with the card. The default is 400 ms (0.4 second).
- **ImpresserDieImpressDepth**—Set the depth, micrometers, of the impression on a card.
- **ImpresserDieTargetTemperature**—Set the temperature of the impresser die (in degrees Celsius).
- **ImpressPosition1**—Set the distance (in mm) from the leading edge of the card to the center of the first impress position on the card.
- **ImpressPosition2**—Set the distance (in mm) from the leading edge of the card to the center of the second impress position on the card.
- **ImpressPosition3**—Set the distance (in mm) from the leading edge of the card to the center of the third impress position on the card.

Only one impression is allowed on a card. The ImpressPosition value used is set using your card personalization software.

- **RetransferDepthOffset**—Specify the depth change to the **ImpresserDieImpressDepth** value when the tactile impression module is connected to a retransfer card printer.
- **RetransferDwellTimeOffset**—Specify the time change (in milliseconds) to the **ImpresserDieDwellTime** value when the tactile impression module is connected to a retransfer card printer.
- **RetransferTemperatureOffset**—Specify the temperature change (in degrees Celsius) to the **ImpresserDieTargetTemperature** value when the tactile impression module is connected to a retransfer card printer.
- WhiteFoilDepthOffset—Specify the depth change to the **ImpresserDieImpressDepth** value when using white foil.
- WhiteFoilDwellTimeOffset—Specify the dwell time change (in milliseconds) to the **ImpresserDieDwellTime** value when using white foil.
- WhiteFoilTemperatureOffset—Specify the temperature change (in degrees Celsius) to the **ImpresserDieTargetTemperature** value when using white foil.

Manufacturing

The **Manufacturing** settings define values for card movement in the printer. **Manufacturing** settings are available to WebService access-level users only.

WifiNetworkStationSetup

- The **WifiNetworkStationSetup** option displays in the Printer Setting menu only when a Wi-Fi Dongle is installed in the printer.
- Enter these values before enabling wireless communication using the **WifiModes** settings.

The **WifiNetworkStationSetup** settings allow you to configure the Wi-Fi Dongle.

Description	Default Value	Current Value (unit)
WifiAddressMethod	DHCP	DHCP
WifiDnsAddress1	0.0.0.0	0.0.0.0
WifiDnsAddress2	0.0.0.0	0.0.0.0
WifiDnsSearchSuffix		
WifiGatewayAddress	0.0.0.0	0.0.0.0
WifiIpAddress	0.0.0.0	0.0.0.0
WifiMacAddress		00:0e:8e:76:9f:ec
WifiPassword		
WifiSecurityMode	None	None
WifiSSID		
WifiSubnetMask	0.0.0.0	0.0.0.0

Change the settings, and then click **Set Current** to apply the changes.

- **WifiAddressMethod**—The method used to obtain the Wi-Fi network IP address. Select either **DHCP** or **STATIC** from the drop-down list. The default value is DHCP.
  - When the value is DHCP, the **WifiGatewayAddress**, **WifiIpAddress**, and **WifiSubnetMask** values are controlled by the DNS server and the settings are filled in automatically.
  - When the value is STATIC, the **WifiGatewayAddress**, **WifiIPAddress**, and **WifiSubnetMask** values must be entered manually. Obtain these values from your network administrator.
    - **WifiGatewayAddress**—Enter the gateway address for the Wi-Fi network.
    - **WifiIpAddress**—Enter the static IP address for the printer.
    - **WifiSubnetMask**—Enter the subnet mask for the Wi-Fi network.
- **WifiDnsAddress1**, **WifiDnsAddress2**, **WifiDnsSearchSuffix**—These settings are not used at this time.
- **WifiMacAddress**—The MAC address of the Wi-Fi Dongle. This is a read-only value.
- **WifiPassword**—Enter the password for the Wi-Fi network. Obtain the password from your network administrator. You must enter a password if you specify a Wi-Fi security mode. The password does not display after it is set.
- **WifiSecurityMode**—Set a security mode for the printer connection to the Wi-Fi network. If you specify a security mode, you also must enter a password. You can select from the following:
  - **None**—No security is used.
  - **WPA2_Personal**—Use the WPA2 (Wi-Fi Protected Access) security protocol.
  - **WPA2_Enterprise**—Use the WPA2 (Wi-Fi Protected Access) security protocol.
- **WifiSSID**—Enter the SSID (Service Set IDentifier) for the network. Obtain this value from your network administrator.

WifiModes

- The **WifiModes** option displays in the Printer Setting menu only when a Wi-Fi Dongle is installed in the printer.
- Set the **WifiModes** values after you enter the settings in **WifiNetworkStationSetup**. The printer attempts to start the network when **WifiModes** is set to Station and requires the values entered in **WifiNetworkStationSetup**.

The **WifiModes** settings allow you to enable or disable wireless communication. The printer supports the following Wi-Fi specifications:

- Wi-Fi types G (7 MB/s) and N (100 MB/s)
- Dual band 2GHz and 5GHz

Description	Default Value	Current Value (unit)
WifiMode	Disabled	Disabled

Change the settings, and then click **Set Current** to apply the changes.

- **WifiMode**—Select **Station** to enable Wi-Fi communication.

Update Password

WebAdmin access-level personnel can specify to password protect Printer Manager and limit access to the advanced settings. Adding password protection is the preferred method of restricting access to Printer Manager. If no password is assigned, a password is not needed to log on to Printer Manager.

Description	Value
Choose Username to Update	WebAdmin
Current Password	
New Password	
Confirm New Password	

Do the following to change the password:

1. Select the access level for which you want to assign a password. The WebAdmin access level can update the WebAdmin and WebUser passwords.
2. Enter the current password. If a current password is not set, leave this field blank.
3. Enter the new password in the corresponding field. To remove a password, leave this field blank.
4. Enter the new password again to confirm it. Leave the field blank if you are removing the password.
5. Click **Update Password** to apply the changes.

Hints & Tips

- Passwords are hierarchical in the following order: WebService, WebAdmin, and WebUser. You can use a password that is higher in the hierarchy to log on to a specific role.
- Passwords may contain the following characters: a–z, A–Z, 0–9, +, and /.

Caution: Do not change the WebService password.

Certificates

Enter or select options to manage custom TLS printer certificates. Refer to "Adding a TLS Certificate" on page 47 for details on certificate management.

Action	Description
Create CSR	Generate a new Certificate Signing Request(CSR) file to submit to a Certificate Authority for signing.
Load Certificate	Load TLS certificate with a signed certificate that has gone through the CSR process. Requires a PEM-formatted Certificate chain to be pasted into the Certificate Data field.
Load Certificate and Key	Load TLS certificate including private key. Requires a PEM-formatted certificate chain and encrypted private key pasted into the Certificate Data field, and the private key decryption Password entered in the Key Password field.
Remove TLS Certificate	Remove current TLS private key and full certificate chain.

Set Job Queue State

Enter or select values prior to shipping the printer or system to or from repair facilities.

This setting is used primarily for financial printers. Contact your service provider for more information.

Field	Value	Description
Current Password		Enter the currently set password. Leave the field blank if no password has been set.
Next Password		Enter a new password. A blank value means that no password is required or leaves the current password unchanged, depending on the settings.
Confirm Next Password		Re-enter the same value used in the Next Password field.
State	• **Online** • **Suspend** • **Offline**	• StartJob succeeds if there is space in the queue. • StartJob succeeds if there is space in the queue and exceptionJob=true. • StartJob does not succeed under any circumstances.

Do the following to change the job queue state:

1. Enter the current password for the printer or system.
2. Enter a new password for the printer or system.
3. Re-enter the new password for verification.
4. Select a state:
   - **Online**—The printer performs normally.
   - **Suspend**—Deactivates the printer, but allows for some exception jobs.
   - **Offline**—Deactivates the printer for transportation.
5. Click **Set Job Queue State** to apply the changes.

To change an “Offline” printer to “Online,” you must enter the same password that was used to set it to “Offline.”

TroubleShooting Menu

The **TroubleShooting** menu for the WebAdmin access level contains settings and tools that help you isolate card production issues. Use the TroubleShooting options to run an SSA test when installing a magnetic stripe module, view and print the activity log, reset the log, reset counters, and reset the printer.

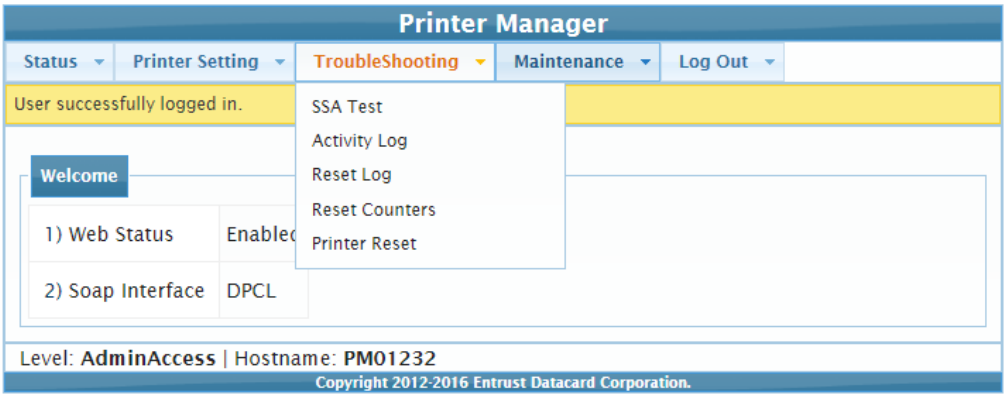

TroubleShooting Menu Option	Function	WebUser	WebAdmin
SSA Test	Calculate the location of the magnetic stripe start sentinel.	No	Select options and run the test
Activity Log	Display printer activity.	No	View
Reset Log	Reset the activity log.	No	Yes
Reset Counters	Reset card counters.	No	Yes
Printer Reset	Restart the printer.	No	Yes

SSA Test

The SSA Test calculates and stores the location of the magnetic stripe start sentinel. Use the test if you are adding a magnetic stripe module to the printer. Insert a card with a magnetic stripe into the printer, either in the input hopper or through the exception slot, and then click **Run**. The printer performs the test and ejects the card into the reject tray.

Description	Default Value	MagStripe Head
SSATest	1	1

- Select the magnetic stripe head to test.

Activity Log

The **Activity Log** displays information about printer activity for troubleshooting printer performance issues. It includes all actions and errors since last reset. Save and send the activity log to your service provider when you request service.

1. Click **Download** to save the activity log information.
2. Enter a location on your PC to save the file.
3. Save and send the activity log to your service provider when you request service.

   Sample Data

   18: 0d 17h 57m 10.479s [JOB_____NOTICE] Film supply state is now PreRegisteringForPrinting

   18: 0d 17h 57m 13.145s [JOB_____NOTICE] Film supply state is now PreRegisteredForPrinting

   18: 0d 17h 57m 13.145s [JOB_____NOTICE] Ribbon supply state is now PreRegistered

Reset Log

The **Reset Log** option allows a WebAdmin access-level user to reset the Activity Log.

Click **Run** to reset the Activity Log.

Reset Counters

The **Reset Counters** option resets the Current Card counter functions in the printer. Life counters or total card counts cannot be reset.

Click **Run** to reset the counters.

Printer Reset

The **Printer Reset** option restarts the printer.

Click **Run** to restart the printer.

Maintenance Menu

The **Maintenance** menu allows WebUser and WebAdmin access-level users to run a cleaning card from Printer Manager. Additionally, the Maintenance menu provides the WebAdmin level with the rights to upload updates to the printer.

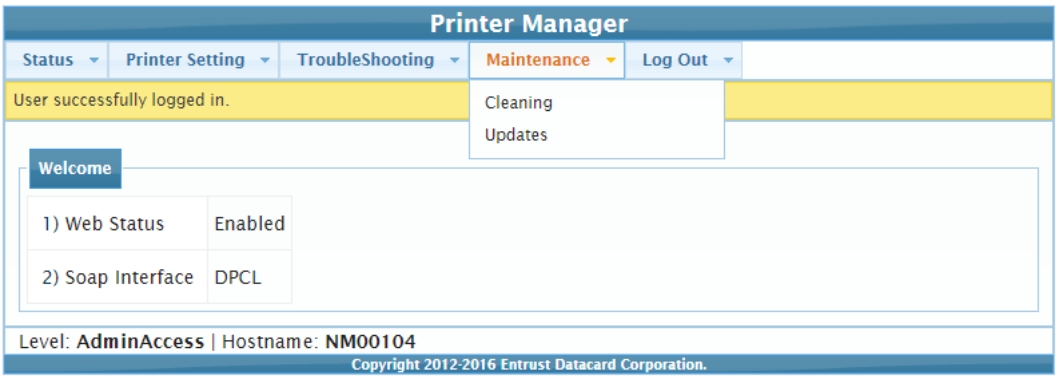

Maintenance Menu Option	Function	WebUser	WebAdmin
Cleaning	Clean the printer.	Run cleaning card	Run cleaning card
Updates	Update the printer settings.	No	Upload File

Cleaning

Cleans the printer using an isopropanol cleaning card. If the printer has a laminator, you also can select to clean the laminator separately.

Refer to the printer's *User's Guide* for complete information about cleaning the printer.

Clean the Printer

1. Unlock the printer, if necessary.
2. Remove the ink ribbon and retransfer film cartridges, and the cleaning sleeve from the printer.
3. Remove any blank card stock from the input hopper.

   If you are cleaning a printer with a multi-hopper, you do not need to remove cards from the input hopper cartridges.

4. Close and lock the printer, if necessary.

5. Place the isopropanol cleaning card in the card input hopper. If you are cleaning a printer with a multi-hopper, insert the cleaning card in the exception slide.
6. Select **Maintenance > Cleaning**.
7. Select **Clean Printer**.
8. Click **Run** to start the cleaning process. Press the USER button on the printer when the message "172: Insert cleaning card" displays on the LCD panel.

   The printer picks the cleaning card and moves it through the printer several times, and ejects it in the output hopper or places it in the card reject tray.

   If you are cleaning a system with a laminator, the card moves into the laminator after cleaning the printer and cleans the laminator rollers and card entry area. The cleaning card is ejected into the laminator output hopper or the laminator reject tray. If necessary, open the laminator to remove the cleaning card..

9. Unlock the printer.
10. Remove the used cleaning card.
11. Replace the cards in the input hopper.
12. Install a new cleaning sleeve. Refer to "Install the Cleaning Sleeve" on page 22.
13. Replace the ink ribbon and retransfer film cartridges and close the printer access door. Lock the printer, if necessary.

Clean the Laminator

1. Select **Clean Laminator** on the **Maintenance > Cleaning** page.
2. Click **Run**.

   The printer LCD panel displays the message "172: Insert cleaning card."

3. Insert the double-sided, adhesive cleaning card into the card exit slot of the laminator and press the USER button.

   The laminator pulls the cleaning card from the card exit slot into the laminator and moves it back and forth through the L1 and L2 cartridge areas and the card entry area several times.

Updates

The **Updates** option allows a WebAdmin access-level user to send an external settings file to the printer.

To upload a settings file:

1. Click **Browse** and select the file to upload.
2. Click **Upload File**.

Log Out Menu

Use the **Log Out** option to end the current Printer Manager session and return to the Printer Manager Log In page. For security, close the browser window after you log out.

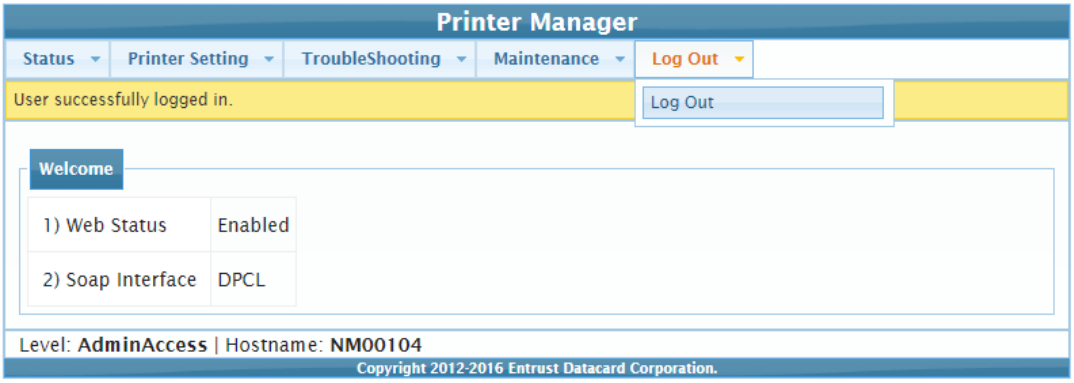

Log Out Menu Option	Function	WebUser	WebAdmin
Log Out	Log out and return to the Log In page.	Yes	Yes

Chapter 4: Supplies and Parts

4

This chapter describes the recommended supplies and replacement parts to use with your printer.

This chapter includes the following information:

- Printer Supplies on page 144
- Cards on page 147
- Cleaning Supplies on page 149
- Replacement Parts on page 151
- Optional Equipment on page 151
- Cables and Power Supplies on page 152

If your system has a laminator, refer to Appendix A: "CR805 Card Printer with Inline Lamination Module" for information about laminator supplies and replacement parts.

Printer Supplies

Use the following information to order ink ribbon and retransfer film.

Ink Ribbon

Color ink ribbons are designed for full-color card printing. Ink ribbon kits are available from your dealer. Kits include the ink ribbon, an isopropanol cleaning card, and a replaceable cleaning sleeve. For best results, always clean the printer and replace the cleaning sleeve with each new ink ribbon. Refer to the printer's *User's Guide* for complete information about cleaning the printer.

The following ink ribbons are available.

Ribbon Type	Part No.	Panel Sets/ Roll	Description
CMYKP	513382-201	1000	Full-color and monochrome printing on one side of the card.
CMYKP-KP	513382-203	750	Full-color and monochrome printing on the front of the card, monochrome printing on the back.
CMYP-KPi	513382-204	750	Full-color printing on the front of the card, monochrome with non-printing inhibitor area on the back.
CMYKP-KPi	513382-205	500	Full-color and monochrome printing on the front of the card, monochrome with non-printing inhibitor area on the back.
FCMYP-KP	513382-207	750	Ultraviolet and full-color printing on the front of the card, monochrome printing on the back.

Ribbon Type	Part No.	Panel Sets/ Roll	Description
CMYK	513107-001	1000	Full-color and monochrome printing on the front of the card **Note:** The ribbon does not include a primer (P) panel and must be used with a compatible retransfer film (part numbers 513157-001 or 513157-002).
CMYK-K	513107-003	1000	Full-color and monochrome printing on the front of the card, monochrome printing on the back. **Note:** The ribbon does not include a primer (P) panel and must be used with a compatible retransfer film (part numbers 513157-001 or 513157-002).

Retransfer Film

The following retransfer film is available.

Material	Part No.	Description
Retransfer film	513402-001	Prints up to 1500 images
Retransfer film	513402-002	Prints up to 1000 images.
Retransfer film	513157-001	Prints up to 1500 images. **Note:** The retransfer film must be used only with a compatible ink ribbon without a primer (P) panel (part numbers 513107-001 or 513107-003).
Retransfer film	513157-002	Prints up to 1000 images **Note:** The retransfer film must be used only with a compatible ink ribbon without a primer (P) panel (part numbers 513107-001 or 513107-003).

Supply Storage Guidelines

Follow these guidelines when storing ink ribbon or retransfer film rolls:

- Store supplies in their original packaging until you are ready to use them.
- Select a location away from direct sunlight, with a temperature between 50°F and 80°F
  (10°C and 27°C) with a maximum of 30% to 70% relative humidity.
- Do not store supplies in direct sunlight or high humidity locations.
- Do not store supplies near heating ducts or blowers.
- The supplies maintain their quality for about one year. For optimal card quality, purchase and store quantities that you can use in less than a year.
- The ink ribbon, retransfer film, and card stock might require secure storage and tracking. Follow your policy for storing and tracking the supplies used to make cards.
- Supply rolls must be at room temperature when they are installed in the printer and used. If supplies are stored in a cooler environment than the printer, allow supplies to reach room temperature before using them.
- If the printer will not be used for an extended period of time, remove supplies from the printer and store them.

Cards

For best results, use high-quality cards that meet the following specifications and recommendations.

Card Size

Use ISO ID-1 (also called CR80) size cards with the following dimensions:

Length	3.37 inches	85.60 mm
Width	2.125 inches	53.98 mm
Thickness	0.030 inch	0.762 mm

Actual card thickness can vary by up to ten percent from the sizes listed. The card bow must be less than the thickness of the card.

Card Material

Use cards made from the following materials:

- PVC
- PET
- Polycarbonates
- PET-G

Cards can have a magnetic stripe and signature panel on the back side of the card, and a smart card chip on the front side.

Ink ribbons without a primer (P) panel have the following requirements:

- Only PVC or composite cards are supported. Polycarbonate cards are not supported. Contact your card supplier to determine if your card stock is compatible with the ink ribbon
- Cards with a magnetic stripe and signature panel are not supported.

Card Surface Finish

Cards must have a smooth surface finish for proper retransfer film quality. Cards with a polished or satin finish typically work the best. Print quality may suffer on cards with a matte finish.

Card Irregularities

The heated roller must not lose close contact with the card and retransfer film for proper transfer to the card to take place. Large surface irregularities on a card (such as, bumps, pits, burrs, and so on) cause loss of close contact, and result in print voids.

Even the highest quality manufacturing materials and processes can yield cards with surface irregularities that are large enough to cause print voids. Many surface irregularities are unavoidable (for example, magnetic stripe edges, signature panel edges). Your site must work with your chosen card manufacturer to determine the number and location of unacceptable surface irregularities in any batch of cards.

Card Die Cutting

Cards printed on retransfer printers can have a small, sometimes noticeable, void area (a small white border) around the perimeter of the card where the printing does not transfer to the card. The orientation of the cards during the die cutting manufacturing process has an effect on the size of the non-transferred perimeter.

To obtain the smallest void area, place the image on the card side where the die cutter exited the plastic during the manufacturing process the burr side).

Work with your card supplier to manage the card manufacturing and packaging to ensure the correct orientation of the die-cut cards before shipment. Operators also must be aware that they need to load the cards in the correct orientation into the card printer.

This is an issue only when using cards with blank white surfaces on both sides since the burr side is not obvious after the card is removed from the card tray. Trays of blank white cards should be labeled to indicate the burr side.

For additional information about card stock guidelines, refer to the *Card Stock Requirements Guide*.

Card Handling

These guidelines apply to unprinted cards.

- Debris or particles on blank card stock can reduce card quality and damage the system.
- Grease or oils, such as oils from your fingers, also reduce card quality. Keep cards completely clean. Do not touch the print surface of a card with your fingers or hands. Handle blank card stock by the edges only, or wear gloves.
- Do not use a rubber band to bind blank cards together.
- If you drop a card on the floor, clean it using a lint-free cloth before using it in the system. Do not use solvents to clean the card.

Card Storage

These guidelines apply to both blank card stock and processed cards.

- Use cards that are at room temperature. If cards are stored in a cooler environment than the printer, allow them to reach room temperature before using them.
- Stack cards so that they will not shift and rub against each other.
- Make sure that the magnetic stripe on one card does not come in contact with the magnetic stripe on another card.
- Make sure that cards with magnetic stripes are stored away from magnetic objects.
- Store cards in a cool, dry, and dark place. Excessive light can cause yellowing of cards on exposed edges.
- Store cards in their original packaging.

Cleaning Supplies

For best results, keep additional cleaning supplies available.

The following cleaning supplies are available:

Supply	Part No.	Description
Isopropanol cleaning cards	552141-002	Pack of 10 double-sided, isopropanol cleaning cards used to clean the printer card track and transport rollers.
Adhesive cleaning cards	524405-001	Pack of 10 adhesive cleaning cards used to clean the printer card track, transport rollers, printhead cam rollers, and laminator.
Cleaning sleeves	569946-001	Pack of 5 adhesive cleaning sleeves.
Cleaning swabs	507377-001	Pack of 5 cleaning swabs for cleaning debris and dust from the printhead and from hard-to-reach internal areas of the printer.
Lapping sticks	510108-001	Used to clean the printhead.

Supply	Part No.	Description
Lapping stick support	529147-001	Support tool used to guide the lapping stick and cleaning swab when cleaning the printhead.
Card inspection gloves	812335-001	Nylon gloves for card handling, 12 pairs/pack.

Replacement Parts

The following replacement parts are available for use with the printer.

Ink Ribbon Cartridge

The blue ink ribbon cartridge holds the print ribbon.

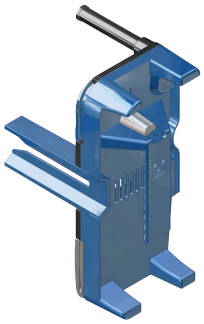

Retransfer Film Cartridge

The yellow retransfer film cartridge holds the retransfer film.

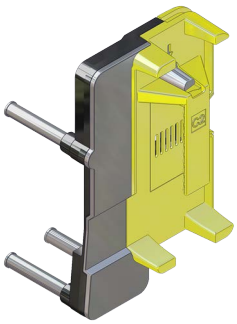

Cleaning Spindle

The cleaning spindle holds the replaceable cleaning sleeve.

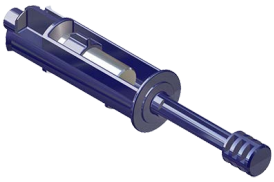

Optional Equipment

Large Output Hopper

The printer can be used with a large output hopper, which holds about 125 cards. You can replace the smaller, standard hopper with the large hopper without using tools.

Cable Lock

The printer and laminator can be secured with an optional cable lock. Obtain the lock from your authorized dealer, because it includes an added security plate that is inserted into the printer.

Cables and Power Supplies

The following cables and power supplies are used by the printer.

Data Cables

The data cable connects the printer to the network or directly to a PC. You can use one of the following data cables:

- USB
- Network (Ethernet)

Use only one type of data cable with a printer. If you need to connect more than one PC to a printer, use a network connection.

USB Cable

The USB data cable, 6 feet (2 meters) long, connects the printer to the computer. Be sure to use a cable rated for USB 2.0 data transmission.

Network Cable

Use a standard Ethernet network cable, either a Cat 5 or Cat 5e cable, to connect the printer to a network port.

Ethernet cables are not available from Entrust. You can purchase a cable from a third-party supplier.

Smart Card/Bar Code USB Cable

Printers that have a loosely coupled smart card reader or a bar code reader use a USB data cable, up to a maximum of 6 feet (2 meters) long, to connect the reader in the printer to the computer.

Printer Power Supply

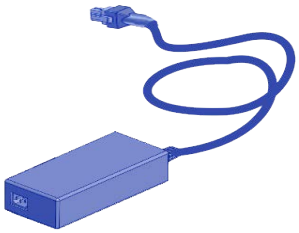

The printer power supply is rated as follows:

- Input: 110–240V, 50–60Hz, 1.5A
- Output: 24V, 6.6A, 160W

It is self-adjusting within the rated input voltage.

Power Cords

The power cords connect the power supplies for the printer, and any attached component, to the facility power. Be sure to use power cords that ground to the facility power source.

The following country-specific power cords are available:

- USA Power cord
- Australia power cord
- Brazil power cord
- China power cord
- Denmark power cord
- European power cord
- India power cord
- Israel power cord
- Italy power cord
- Japan power cord
- South Africa power cord
- Swiss power cord
- United Kingdom power cord

Appendix A: CR805 Card Printer with Inline Lamination Module

A

This appendix provides information about the optional CLM laminator that you can add to your system at the time of purchase, or later as a field upgrade.

About the Laminator System

A laminator system consists of a CR805 retransfer ID card printer and a CLM laminator. The system can print cards and apply an overlay material on the front and back of the card for increased durability and security. Using an overlay material with holographic or other transparent images also improves the security of the card. These materials are tamper evident, making it difficult to reproduce or modify a card.

Your laminator may look different from the one shown in the illustrations, based on the options installed. The procedures described in this appendix apply to all CLM laminators.

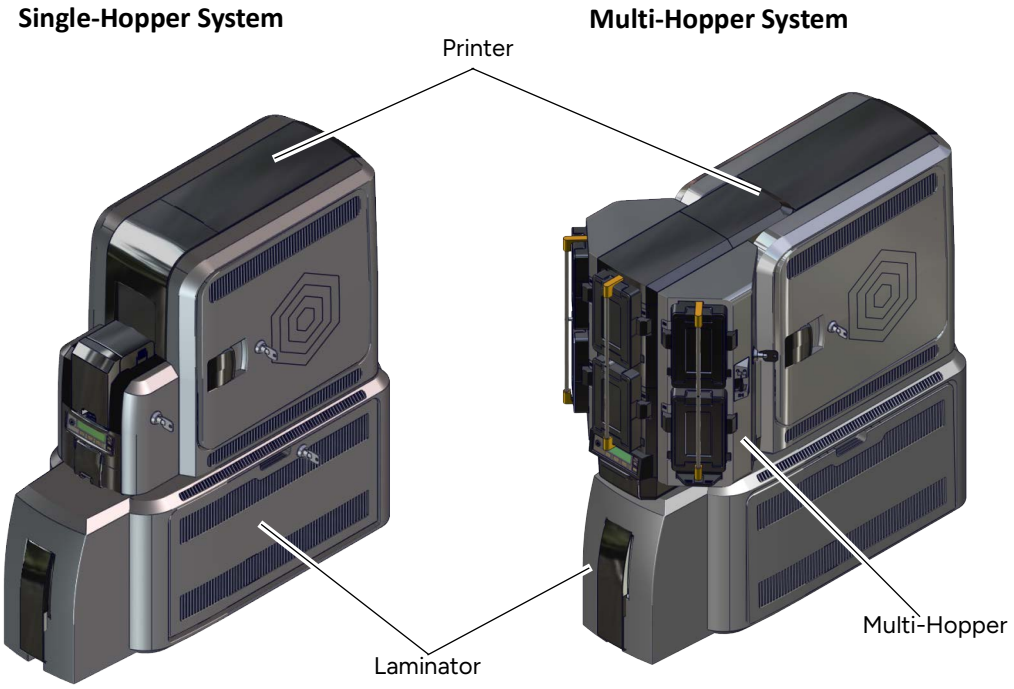

Site Requirements

Provide space for the system and for clearance around the system. Refer to "Site Requirements" on page 3 for information about selecting a location for the system.

System Dimensions

The external system dimensions are shown in the following illustrations.

Single-Hopper System

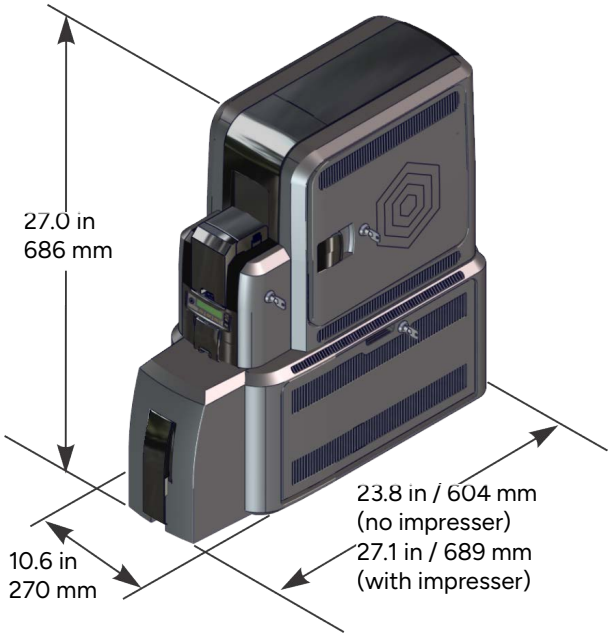

Multi-Hopper System

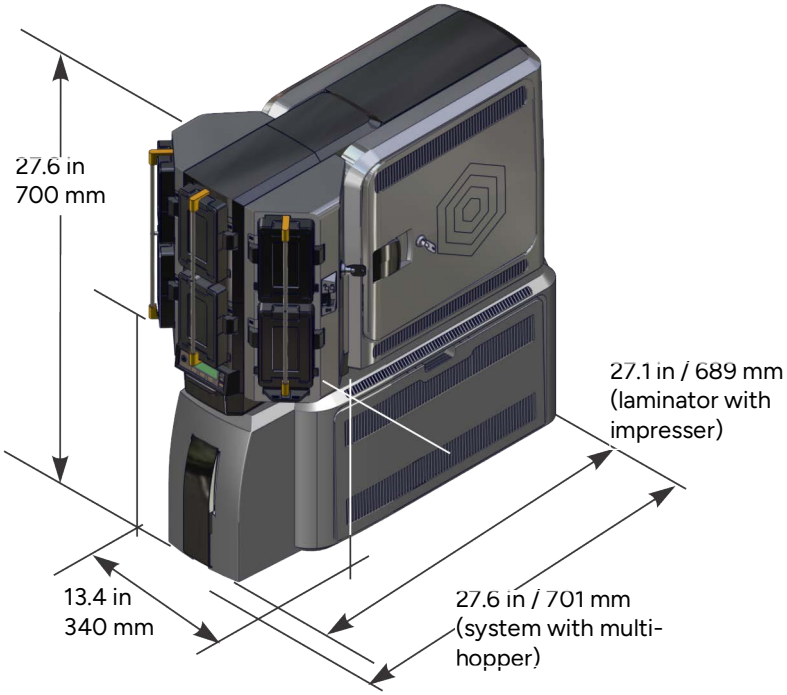

Clearance Requirements

The following measurements show the system dimensions when the input hopper, printer access, and laminator access doors are open.

We recommend that you provide a minimum of 3 inches (76.2 mm) of additional clearance around the system to maintain access to the power cords and data cables, to load and remove cards and supplies, and to provide ventilation.

Single-Hopper System

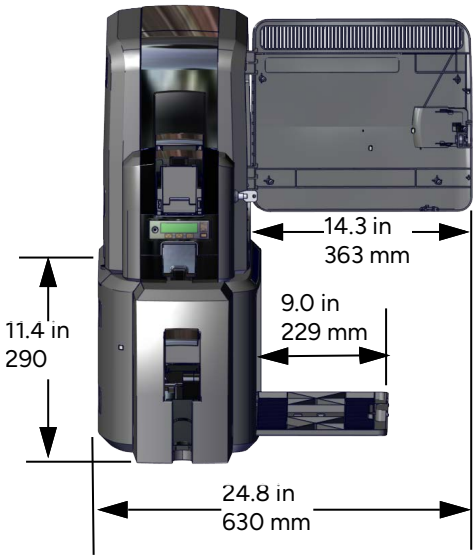

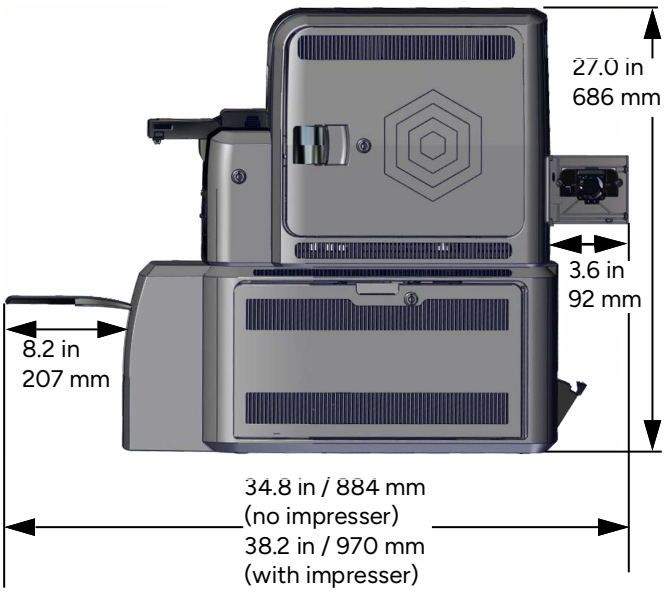

Multi-Hopper System

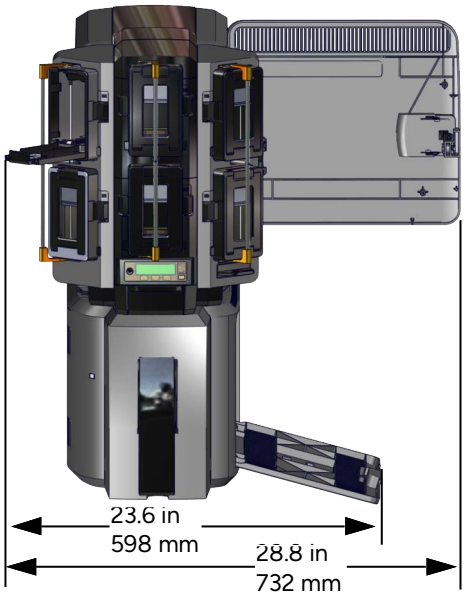

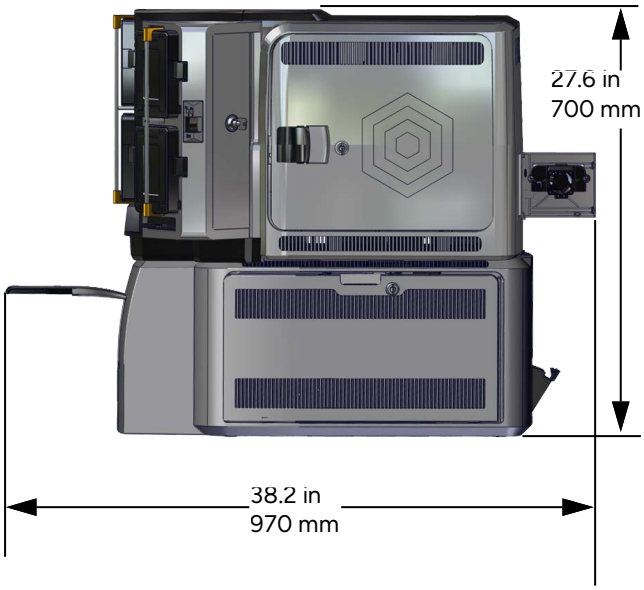

Electrical Requirements

The power supply is rated as follows:

	Electrical Requirements	
System Component	**Input**	**Output**
Printer	110–240V/50–60 Hz/1.5 Amp	24V/3.0Amp/72W
Laminator with L1 only	100–240V/47–63 Hz/2.2 Amp	24V/3.75Amp/90W
Laminator with L1, L2, and impresser	100–240V/47–63 Hz/6.6 Amp	24V/6.6Amp/160W

Unpack the Laminator

Remove the laminator from its shipping carton.

Refer to "Unpack the Printer" on page 9 for information about how to prepare the printer.

1. Open the laminator shipping carton and remove the accessories box.

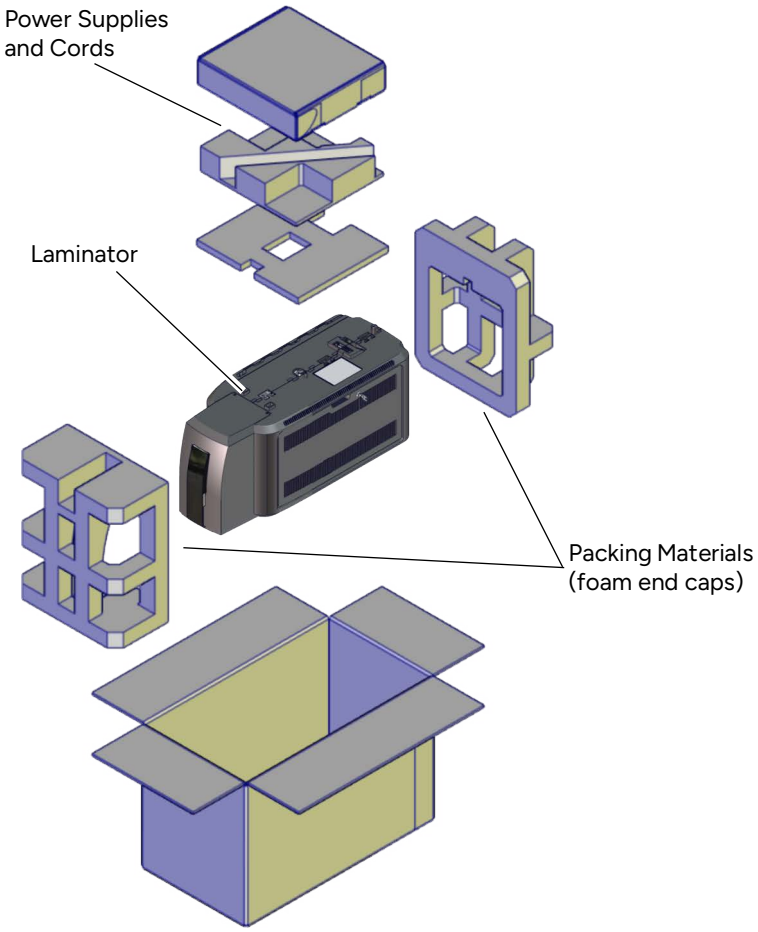

2. Lift the laminator from the carton and remove the foam end caps.
3. Place the laminator on a surface that meets the requirements specified in "Site Requirements" on page A-2.
4. Secure the laminator, if necessary. Refer to "Secure the Laminator" on page A-7.

Save the shipping cartons and packing materials. They are required if you need to store, move, or return the system for service.

Secure the Laminator

This procedure is optional.

You can secure the laminator using one of the following:

- The bolt-down openings in the bottom of the laminator enclosure
- An optional cable lock

Use the Laminator Bolt-Down Openings

The laminator includes bolt-down openings that you can use to secure the system to a mounting surface.

You need the following supplies:

- The bolt-down kit (part no. 509169-001) contains two M6 well nuts.
- Two M6 (6 mm) screws, purchased separately.

  The length of the screws you need depends on the thickness of the mounting surface. The screw length is the surface thickness + 0.75 inch (20 mm).
- Two M6 washers, purchased separately.
- 1/4-inch (7 mm) drill bit.

1. Drill two holes in the mounting surface following the dimensions and requirements shown in the following figure:

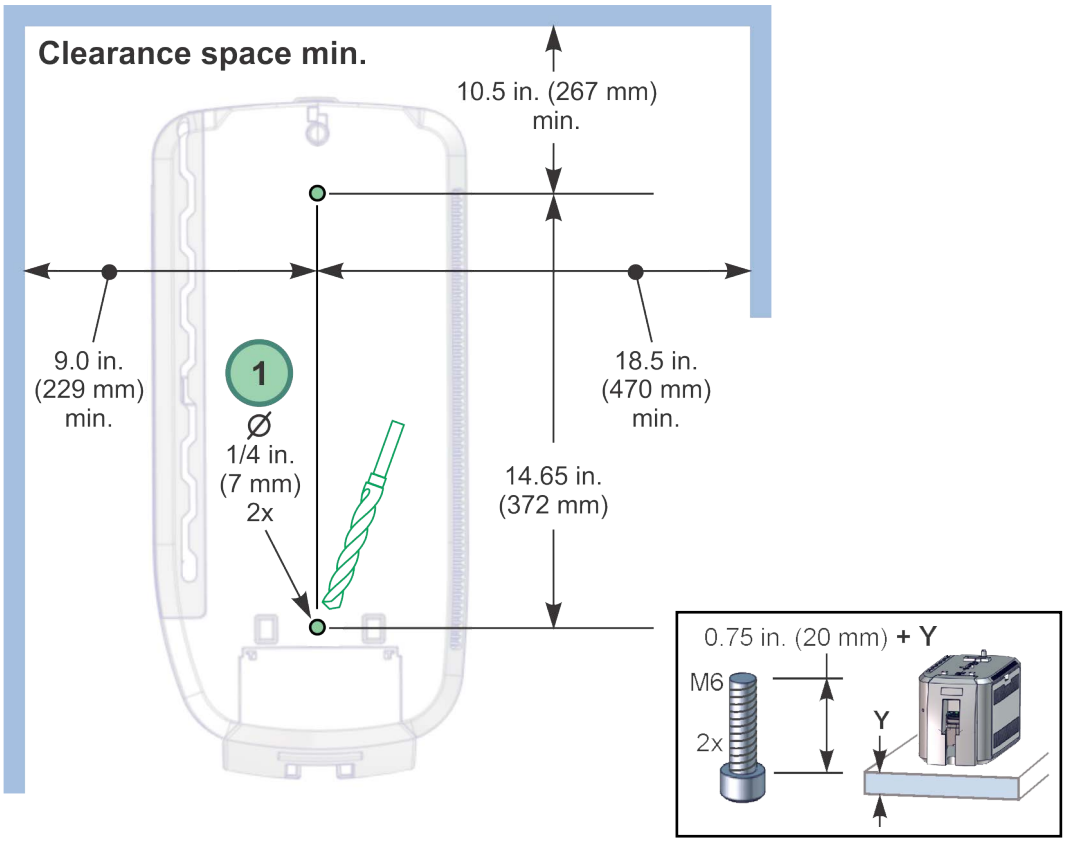

2. Carefully tip the laminator onto its left side (the side without the access door).

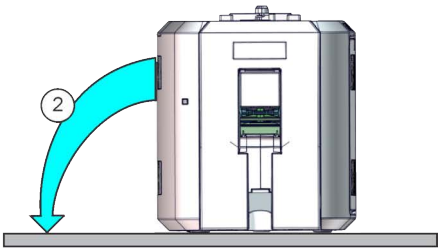

3. Insert the M6 well nut threaded inserts into the bolt-down openings on the bottom of the laminator.

4. Return the laminator to its upright position and position it over the holes that are drilled in the mounting surface.

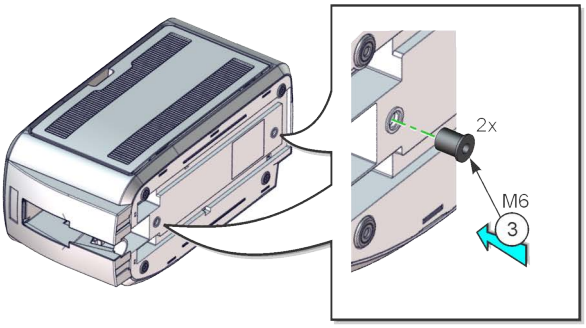

5. Secure the laminator to the mounting surface.

   a. Place a flat washer on each of the screws beneath the mounting surface.

   b. Insert the M6 screws through the holes in the mounting surface and into the well nuts in the bottom of the laminator.

   c. Tighten the screws securely.

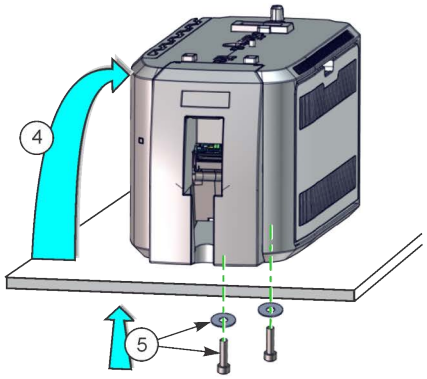

Use the Laminator Cable Lock

You also can secure the laminator using the optional cable lock.

1. Locate the security plate receptacle near the power connection of the laminator

2. Insert the security plate vertically into the receptacle from below the laminator.

3. Insert the T-bar of the cable lock through the opening into the security plate.

4. Follow the instructions included with the cable lock to complete the installation.

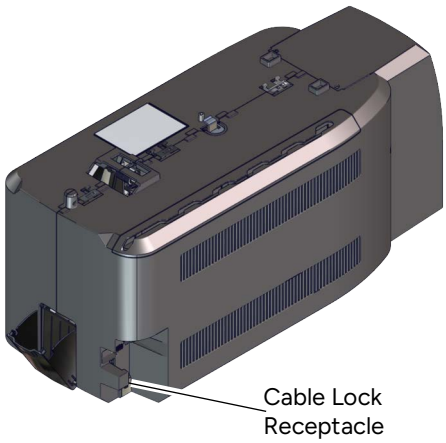

Assemble the Printer and Laminator

If you have installed a large output hopper on the printer, you must remove it before connecting the printer to the laminator.

1. Locate the interconnect cable in the cable routing area of the laminator and make sure that it remains accessible.
2. Unlock and open the laminator access door.

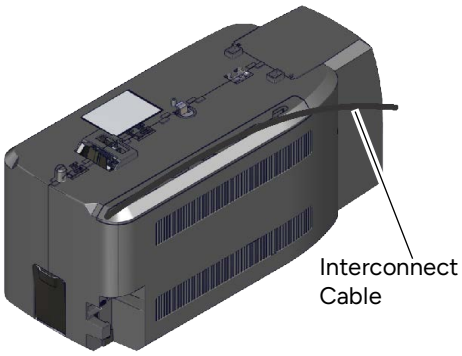

3. Slide the printer locking lever in the laminator to the left to move the mounting lock to the unlocked position.

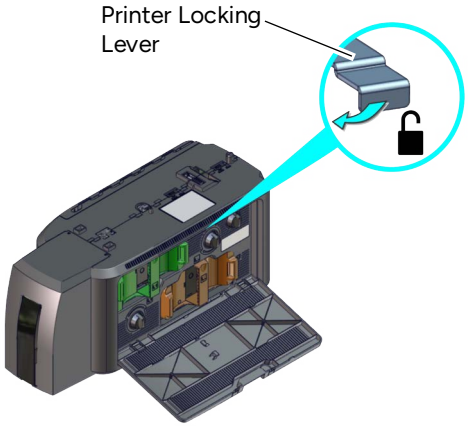

4. Lift the printer over the laminator and align the pins on the laminator with the holes on the underside of the printer.
5. Press down on the printer carefully, but firmly, to position it.
6. Push the printer locking lever to the right to lock the printer onto the laminator. Make sure that the printer is securely locked to the laminator.
7. Close and lock the laminator access door.

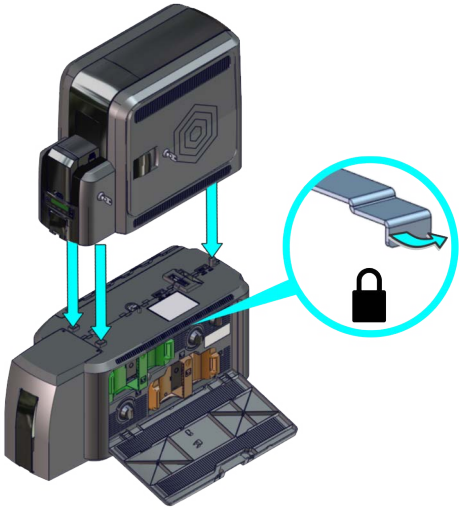

8. Connect the interconnect cable from the laminator to the data port on the printer.

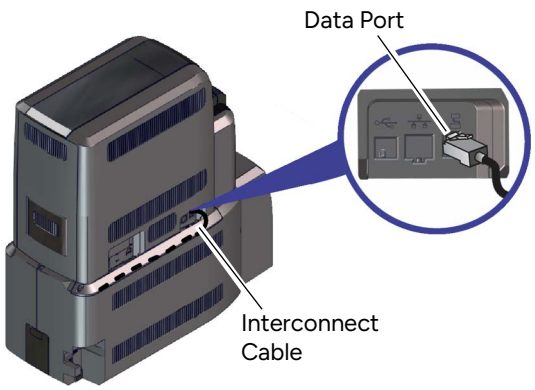

Connect the Power Cords

1. Connect the printer power cord to the printer and plug the power supply cord into the power outlet.

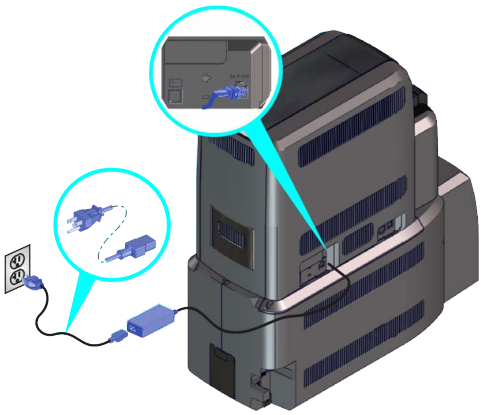

2. Connect the laminator power cord to the laminator and to the power supply. Plug the power supply cord into the power outlet.

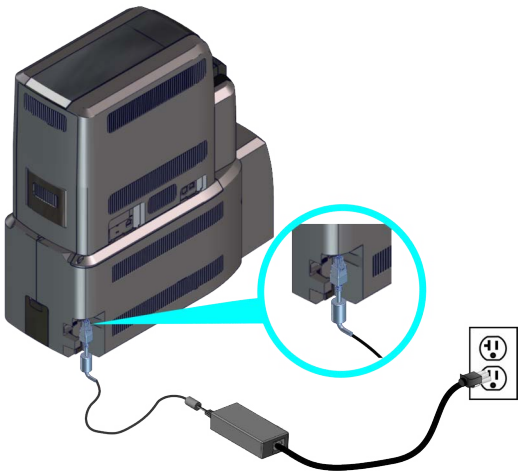

Connect the System to a PC

You can connect the system to a Windows-based PC using either a USB cable or through a network via an Ethernet cable (the Ethernet cable is not supplied with the system).

Connect a USB Cable

1. Connect one end of the USB cable to the USB port of the printer.
2. Connect the other end to a USB port on the PC.

Do not connect the USB cable to the computer until the Card Printer Driver is installed on the PC, or when prompted during the driver installation.

Refer to the *XPS Card Printer Driver User's Guide* to set up the Card Printer Driver to work with the system.

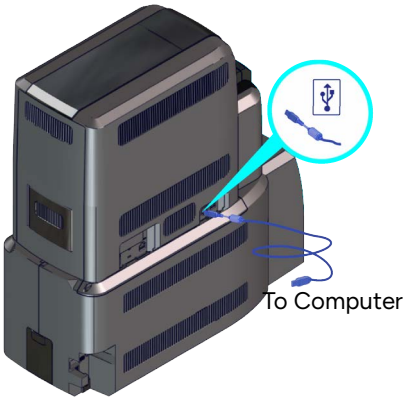

Connect a Network Cable

1. Connect one end of the Ethernet cable to the network connection port on the printer.
2. Connect the other end to a network port.
3. Refer to the *XPS Card Printer Driver User's Guide* to set up the Card Printer Driver to work with the system. If you do not use the Card Printer Driver, refer to your ID software documentation for information about how to design cards and send jobs to the printer and laminator.

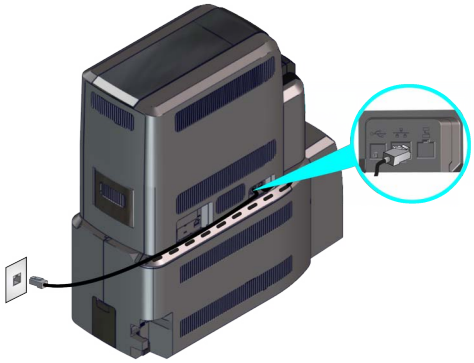

Load Laminator Overlay Material

Load the overlay material in one laminator cartridge at a time.

The L1 (green) and L2 (orange) cartridges fit only in their assigned locations inside the laminator. They are not interchangeable.

1. Unlock and open the laminator access door.
2. Remove the L1 (green) laminator cartridge from the printer. Place the cartridge on a smooth, level surface for loading.

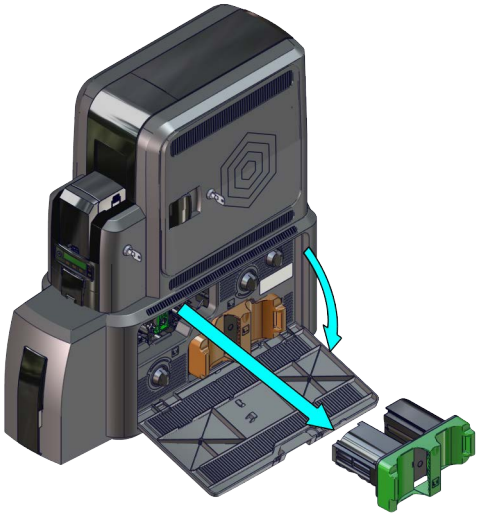

3. Push the release latch (a) and open the gate on the laminator cartridge (b).

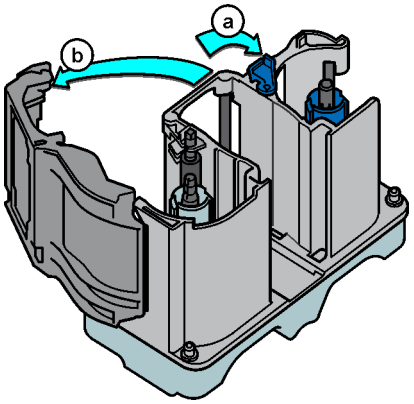

4. Load the new roll of laminator overlay material.

   a. Put the blue supply spool on the blue supply spindle of the cartridge (c). The overlay supply roll can go on only one way and only fits on the correct spindle.

   b. Put the empty silver take-up spool on the silver take-up spindle (d).

   c. Turn the take-up spool clockwise to remove slack from the material (e). The overlay material loads in an S-shape.

      Make sure that the overlay material is between the guides on both the take-up and supply sides of the cartridge.

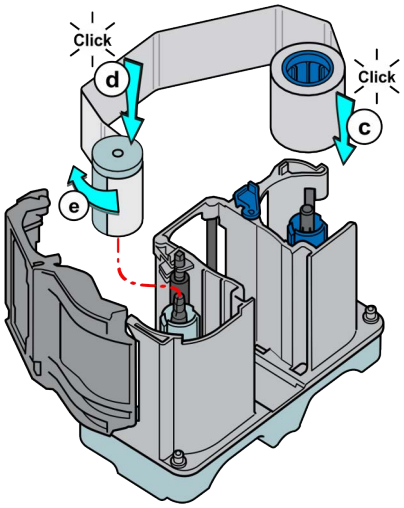

5. Close the laminator cartridge gate (f). Push it in until the latch clicks in place (g). Make sure that the overlay material is not pinched by the cartridge gate.

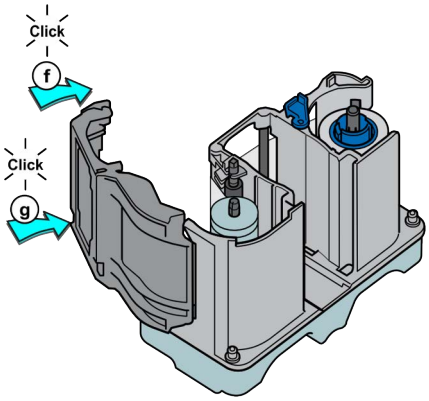

6. Replace the loaded laminator cartridge in the printer.

7. Remove the L2 (orange) cartridge from the laminator, if installed.

8. Repeat step 3 through step 6 to load the overlay onto the L2 cartridge.

9. Close and lock the laminator access door.

Power On the System

Press the power button on the front panel of the printer to power on the system. The printer and laminator perform internal checks and initialize supplies.

If message 222, Firmware version mismatch, displays on the printer LCD, you may need to update the printer and laminator firmware versions. Visit www.entrustdatacard.com for complete installation instructions and to download the latest firmware.

The laminator contains heaters for the L1 and L2 (if installed) cartridges, and for the impresser if one is installed. It can take several minutes for the heaters to reach their correct operating temperature before the system is ready to complete the cards.

The laminator has a power-save feature that powers off the heaters after the printer has been idle for a specified period of time. If the timeout period expires, it can take several minutes for the laminator heaters to return to their operating temperature when a card is sent to the printer. The front panel displays the message **Busy Warming up** during this time. You can change the timeout period using the Printer Manager Laminator setting. Refer to "Laminator" on page 116 for more information about using Printer Manager.

Print a Test Card

After you set up the printer, print several test cards to determine how well the laminator applies the overlay material to the card. You may need to print multiple test cards to make sure that the overlay is positioned correctly. The card stock, the card design, and the printer's environment can influence the appearance of cards.

If your system includes the optional second laminator (L2), make sure that the laminator cartridge is always installed, even if the cartridge is not loaded with overlay material. If the cartridge is not in place, cards are not supported as they travel through the system, and can fall into the bottom of the laminator.

Use the Printer LCD Panel

Use the printer LCD panel to run a card that tests the L1 and L2 laminators (if L2 is installed), debows the card, and impresses the card if an impresser is installed. Refer to "Print a Test Card" on page 41 for complete information about how to print a test card.

Use the Card Printer Driver

Refer to the *XPS Card Printer Driver User's Guide* for information about how to set up lamination preferences and print a driver test card.

Verify the Test Card

Examine the test cards to verify the following.

- The overlays are being applied properly:
  - Each overlay is applied completely to the card.
  - The material adheres well to the edges of the card.
  - The overlay does not come off when the card is bent or twisted.
- The card is debowed correctly.
- The impression is positioned correctly and has the proper depth.

If you need to adjust the laminator settings, refer to the following Printer Manager sections: "Laminator" on page 116 and "LaminateType" on page 124.

Laminator Supplies

The laminator applies patch overlay material to the front and back of the card. The patch overlay is a die-cut polyester shape designed to fit standard ISO ID-1 size card stock.

The patch overlay can cover the complete card, can have a opening for a smart card chip, or can cover the card below the magnetic stripe.

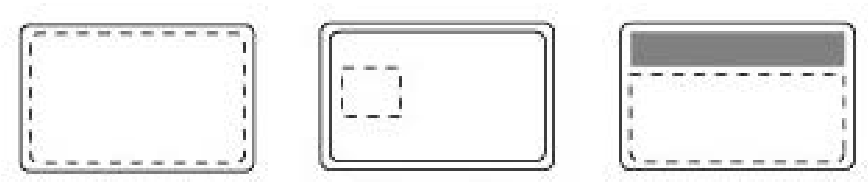

Complete Smart Card Magnetic Stripe

The overlay can be clear or can have a transparent holographic image on it. The holographic materials are called holographic patch and also can be ordered with a custom image. In addition, holographic patch can be designed with a registered image that is located in the same position on each card.

Clear Patch

Random Holographic Patch

Registered Holographic Patch

The following laminator supplies are available. Most are available for a full card, smart card, or magnetic stripe card.

- Entrust DuraGard® 1.0 Mil Clear Laminate, up to 300 images/roll
- Entrust DuraGard® 1.0 Mil Holographic Laminate, up to 300 images/roll

Contact your authorized dealer for more information about available overlays.

Overlay Storage Guidelines

- Store overlay material in the original package until you load it in the laminator. Keep the original packaging closed until you are ready to use the overlay.
- The overlay maintains its quality for about one year. For optimum card quality, purchase and store quantities of material that can be used within one year.
- Overlay material might require secure storage and tracking. Follow your organization's policy for storing and tracking the supplies used to make cards.
- Store the overlay in a location away from direct sunlight, with a temperature between 50° and 80°F (10° and 27°C). A range of 30% to 70% humidity is recommended.
- Install supply rolls at room temperature. If supplies are stored in an environment that is cooler than the printer environment, allow supplies to reach room temperature before you use them.
- If the printer will not be used for an extended period, remove supplies from the printer and store them with new supplies.

Laminator Replacement Parts

Laminator Cartridges

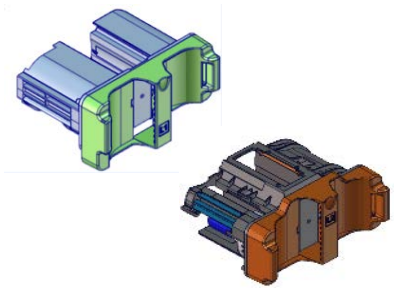

The green L1 and orange L2 cartridges hold the laminator overlay material. They are used in the optional CLM laminator only.

Impresser Die

Contact Entrust Datacard to special-order a new die for your impresser. The die must be installed by an authorized Entrust Datacard service provider.

Laminator Power Supplies

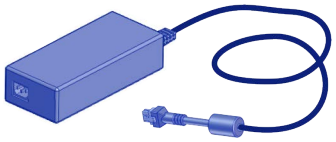

The laminator power supplies are rated as follows:

- Laminator with L1 only:
  - Input: 100–240V, 47–63Hz, 2.2A
  - Output: 24V, 3.75A, 90W
- Laminator with L1 and L2:
  - Input: 100–240V, 47–63Hz, 2.2A
  - Output: 24V, 6.6A, 160W

Laminator power supplies are self-adjusting within the rated input voltage

Power Cords

Refer to "Power Cords" on page 153 for a list of available power cords.